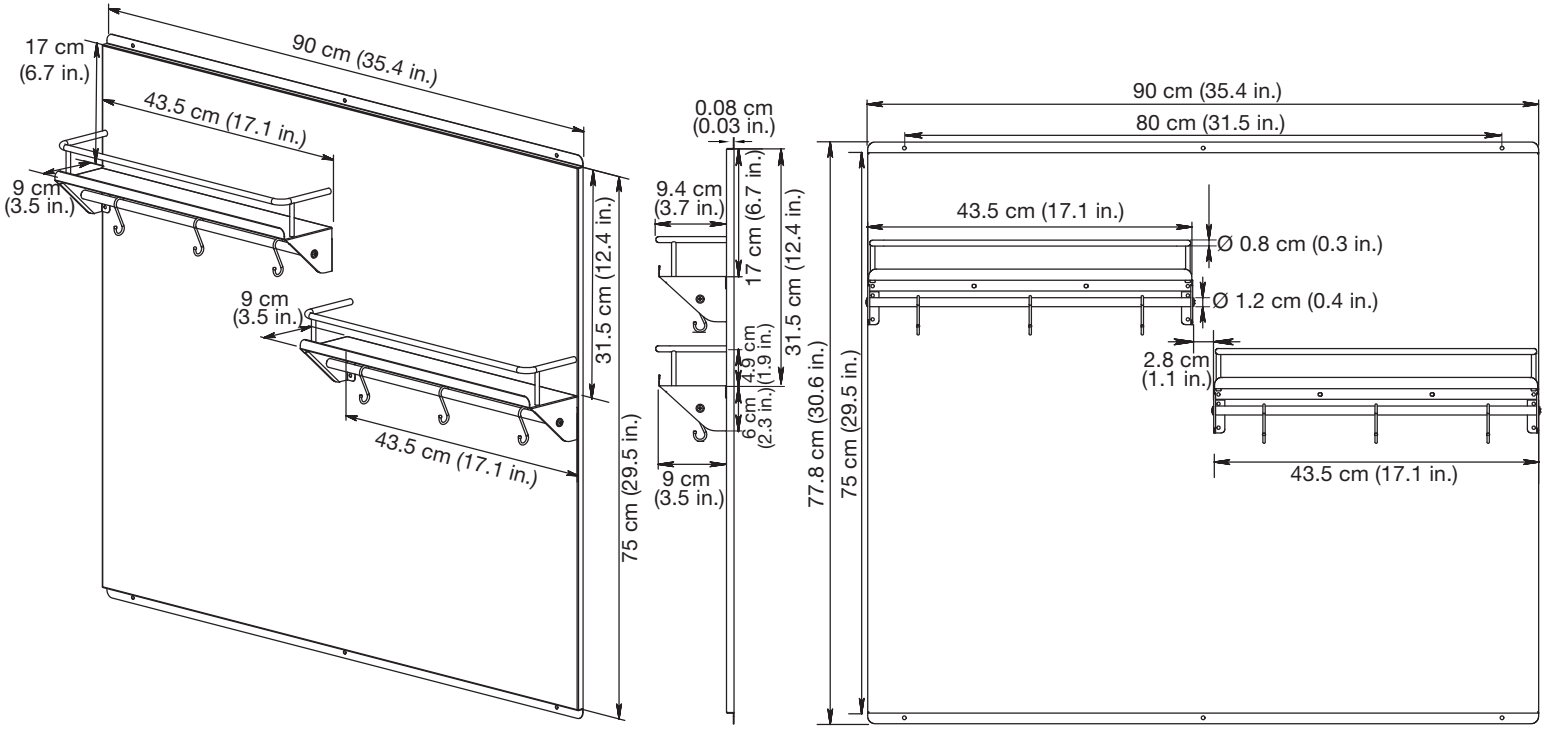Measurements and Diagrams