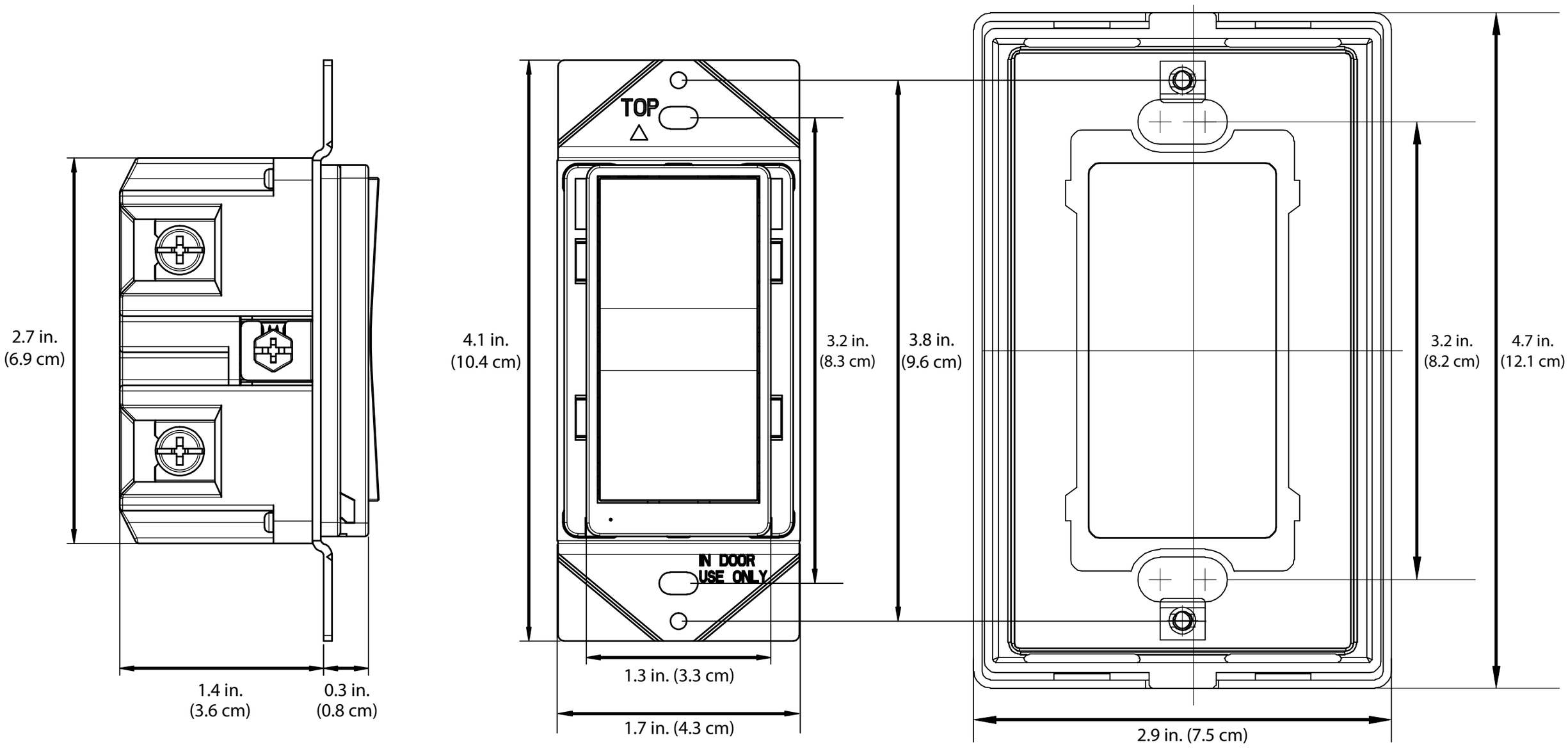
2.7 in.
(6.9 cm)
1.4 in.
(3.6 cm)
0.3 in.
(0.8 cm)
TOP
IN DOOR
USE ONLY
4.1 in.
(10.4 cm)
3.2 in.
(8.3 cm)
3.8 in.
(9.6 cm)
1.3 in. (3.3 cm)
1.7 in. (4.3 cm)
3.2 in.
(8.2 cm)
4.7 in.
(12.1 cm)
2.9 in. (7.5 cm)