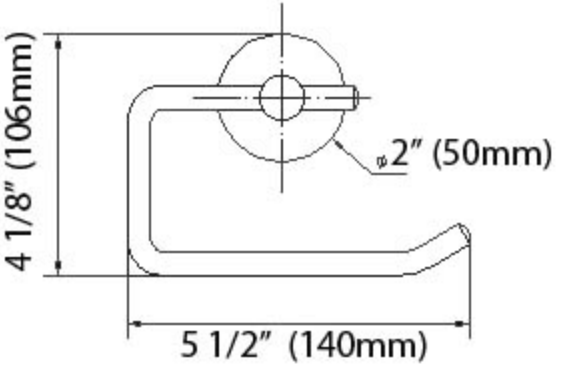
4 1/8" (106mm)
φ2" (50mm)
5 1/2" (140mm)

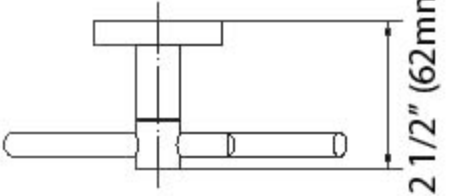
2 1/2" (62mm)

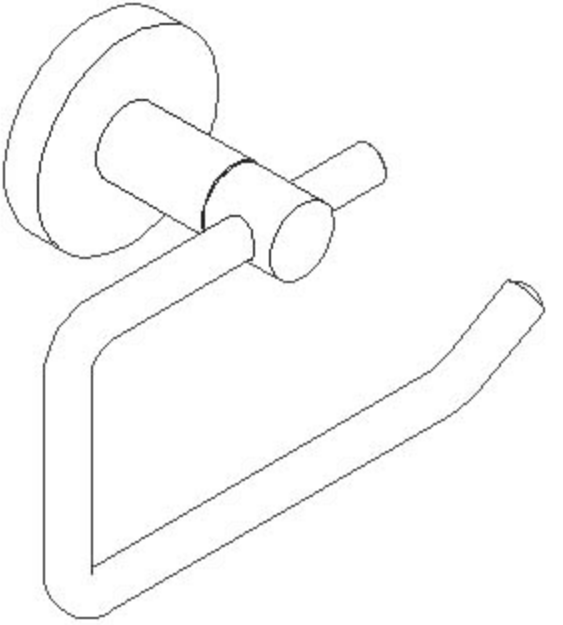

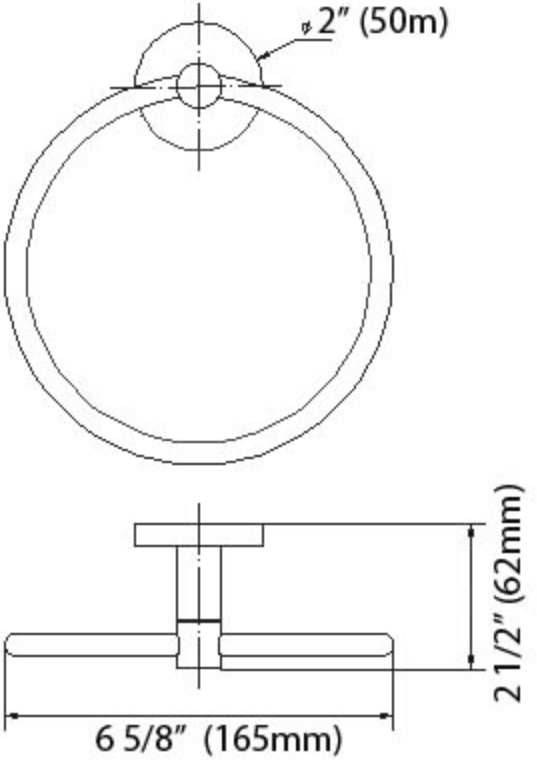
ø 2" (50m)
2 1/2" (62mm)
6 5/8" (165mm)

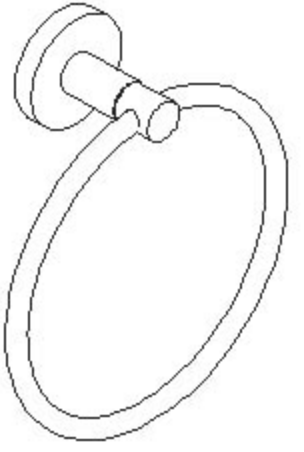

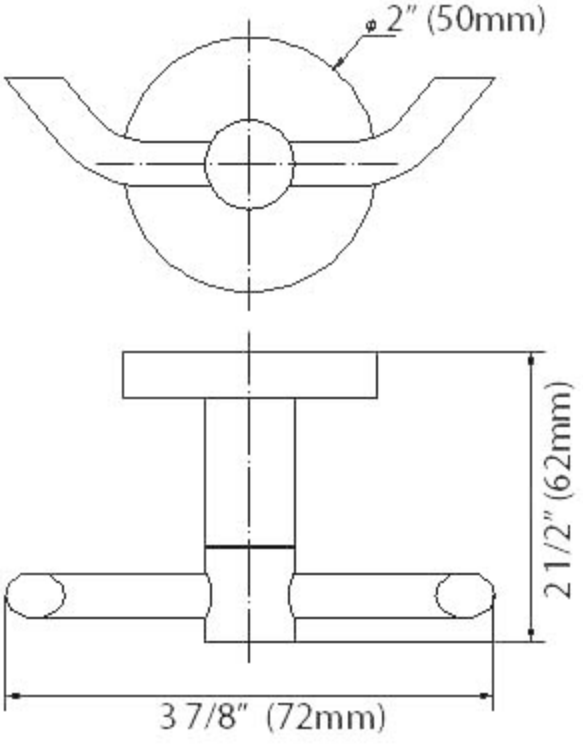
ø 2" (50mm)
2 1/2" (62mm)
3 7/8" (72mm)

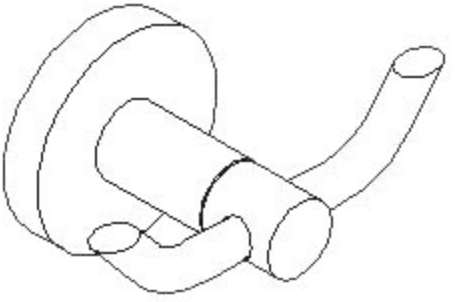

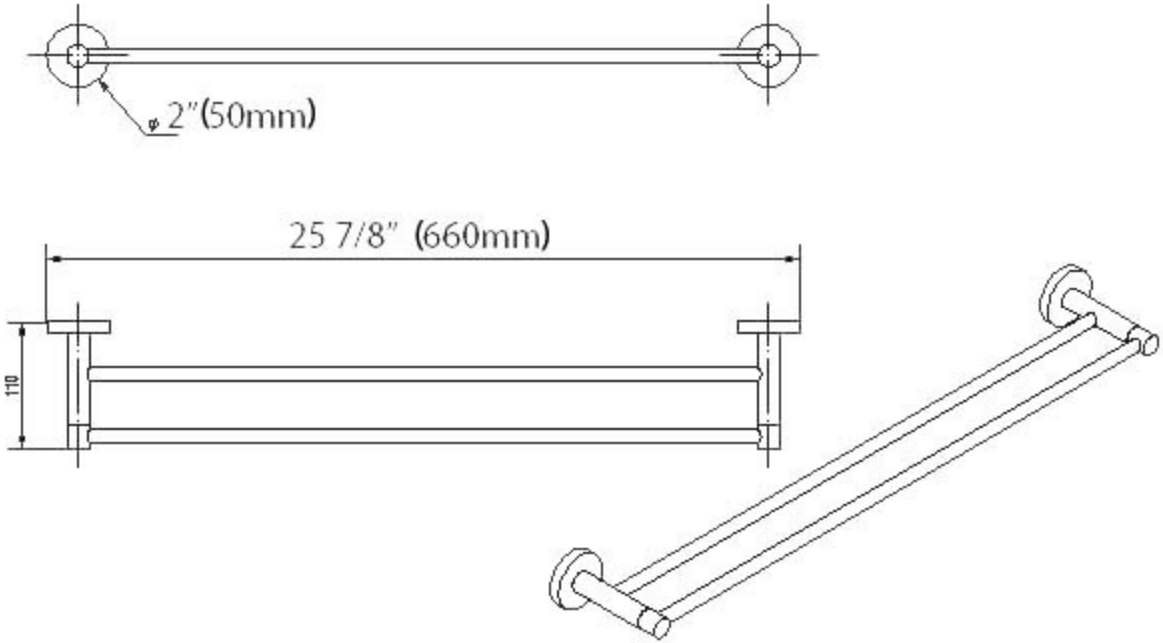
φ 2"(50mm)
25 7/8" (660mm)
110