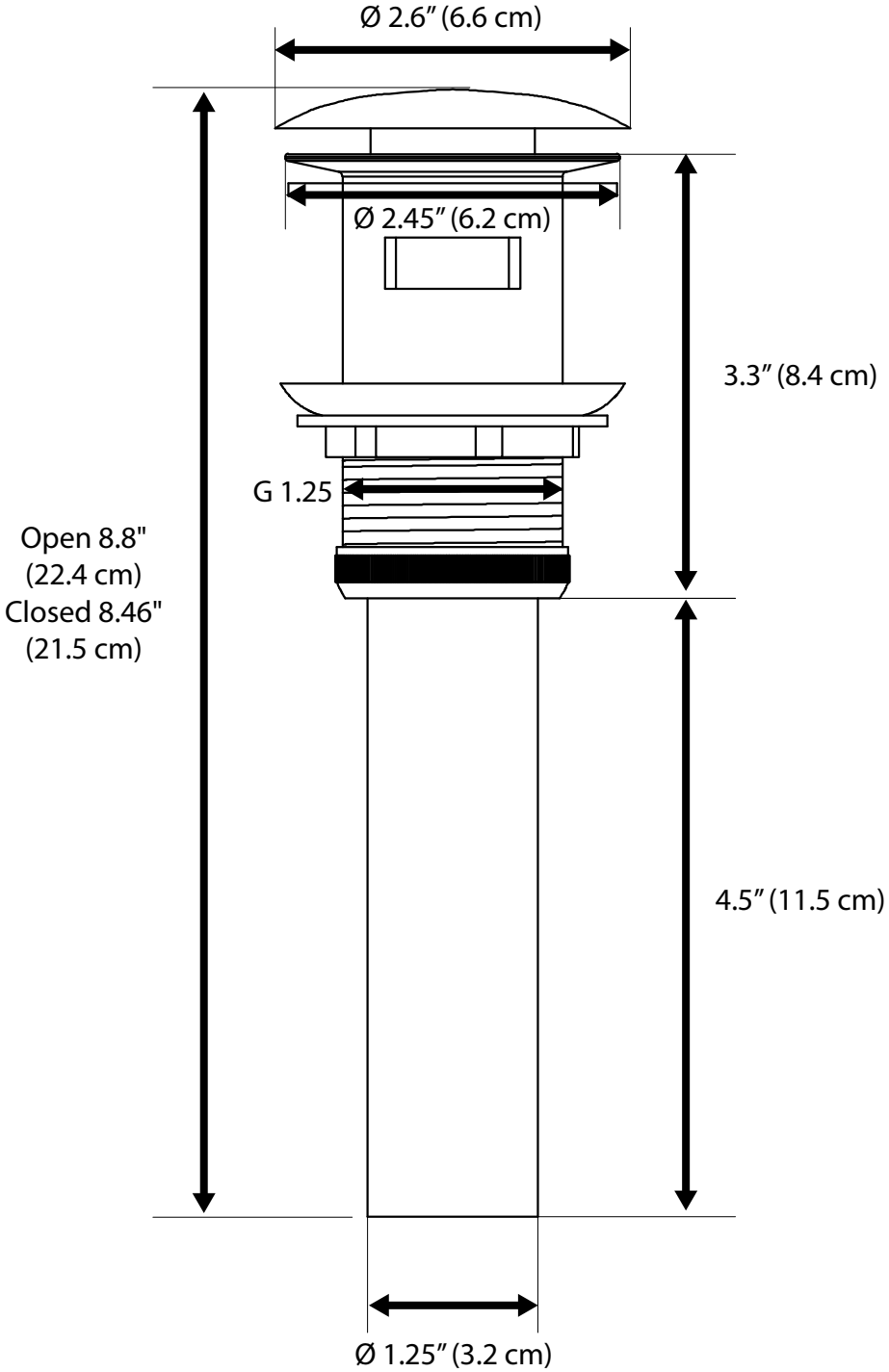
Ø 2.6″ (6.6 cm)
Ø 2.45″ (6.2 cm)
3.3″ (8.4 cm)
G 1.25
Open 8.8"
(22.4 cm)
Closed 8.46"
(21.5 cm)
4.5″ (11.5 cm)
Ø 1.25″ (3.2 cm)