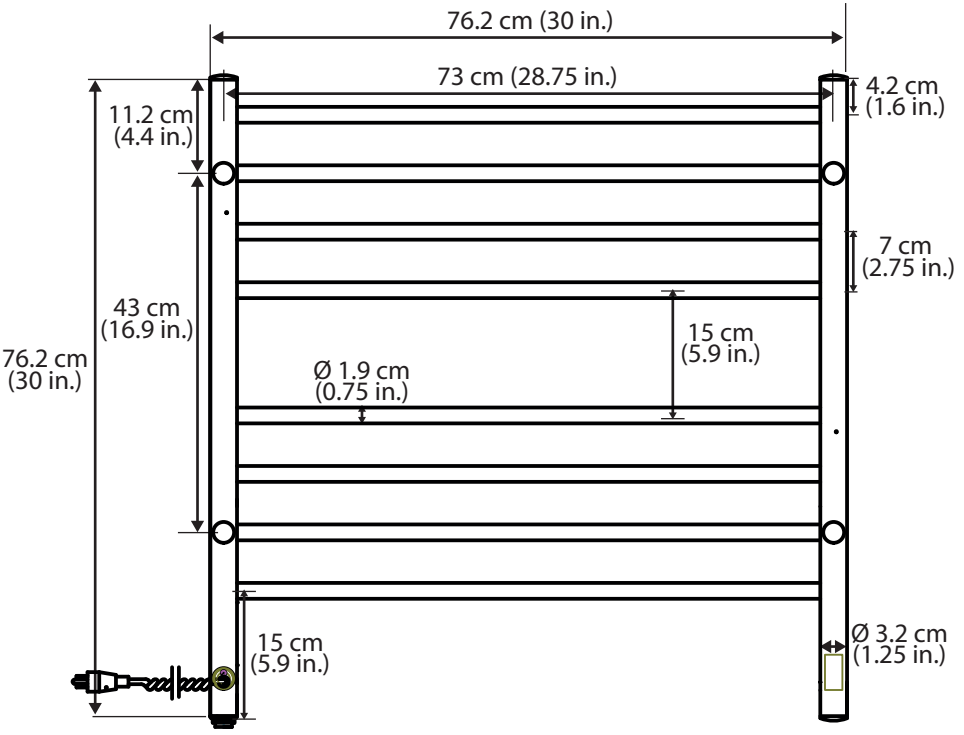
76.2 cm (30 in.)
73 cm (28.75 in.)
4.2 cm
(1.6 in.)
11.2 cm
(4.4 in.)
7 cm
(2.75 in.)
43 cm
(16.9 in.)
15 cm
(5.9 in.)
76.2 cm
(30 in.)
Ø 1.9 cm
(0.75 in.)
15 cm
(5.9 in.)
Ø 3.2 cm
(1.25 in.)

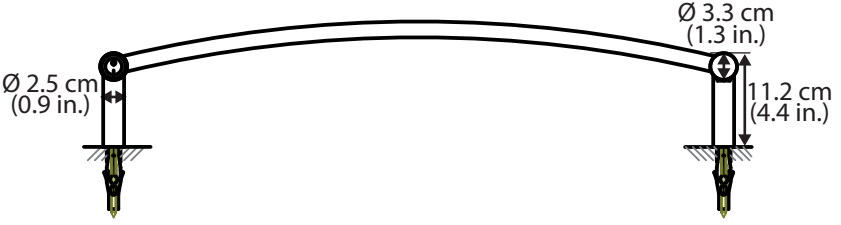
Ø 3.3 cm
(1.3 in.)
Ø 2.5 cm
(0.9 in.)
11.2 cm
(4.4 in.)