ANCONA
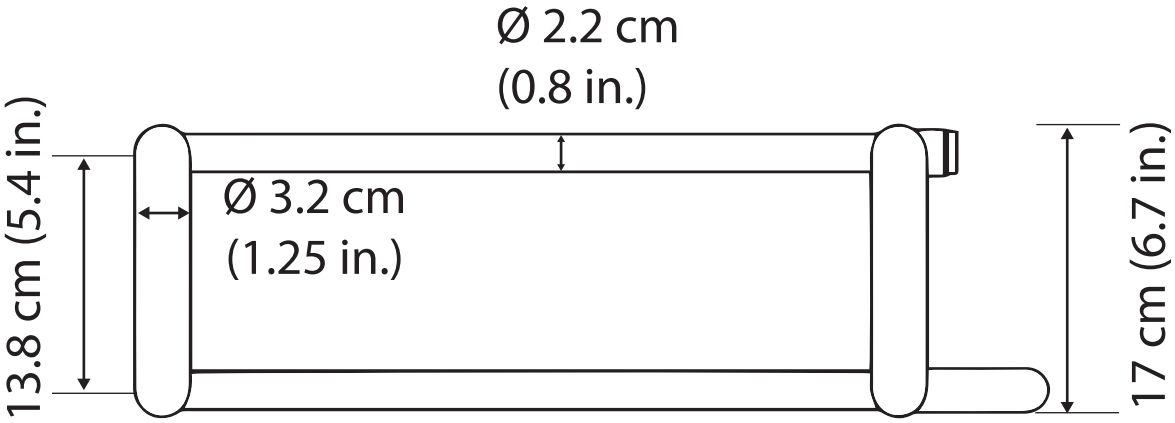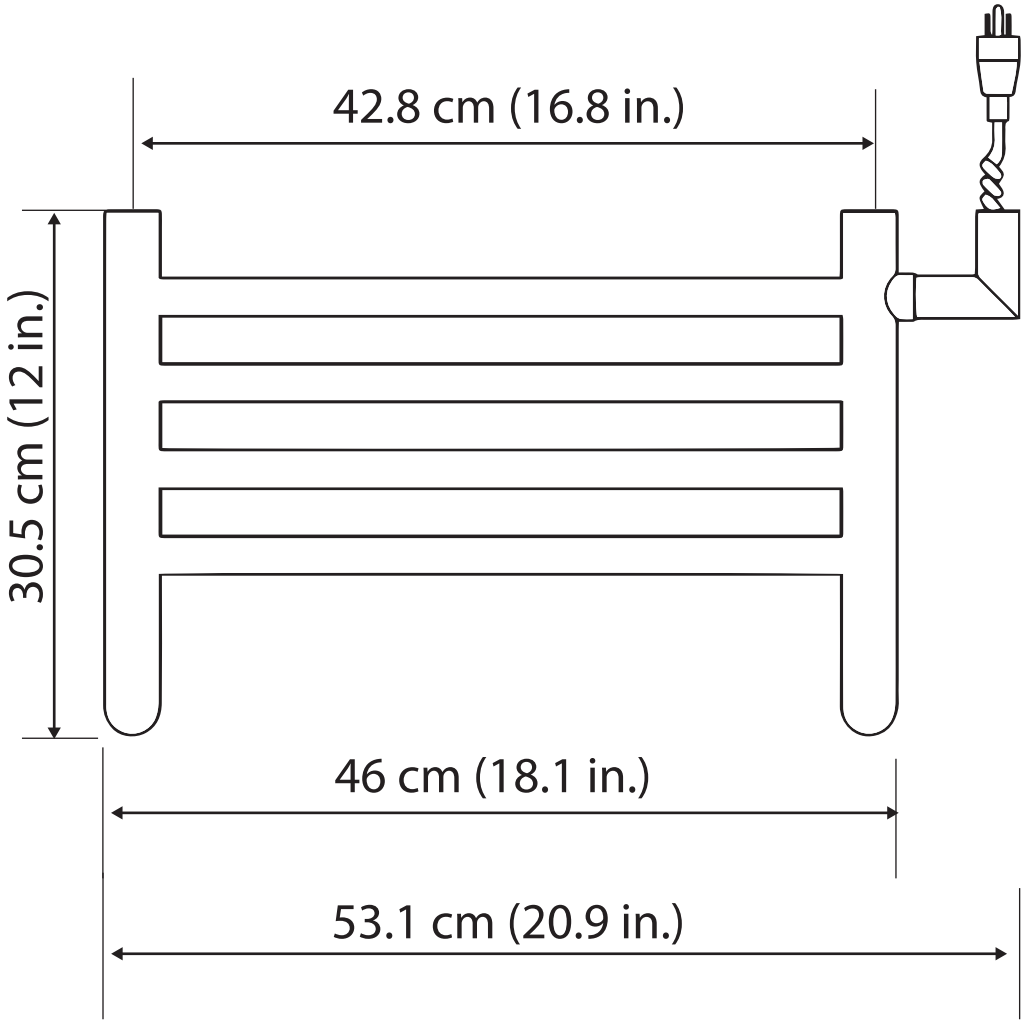
Essentia Shelf Polished