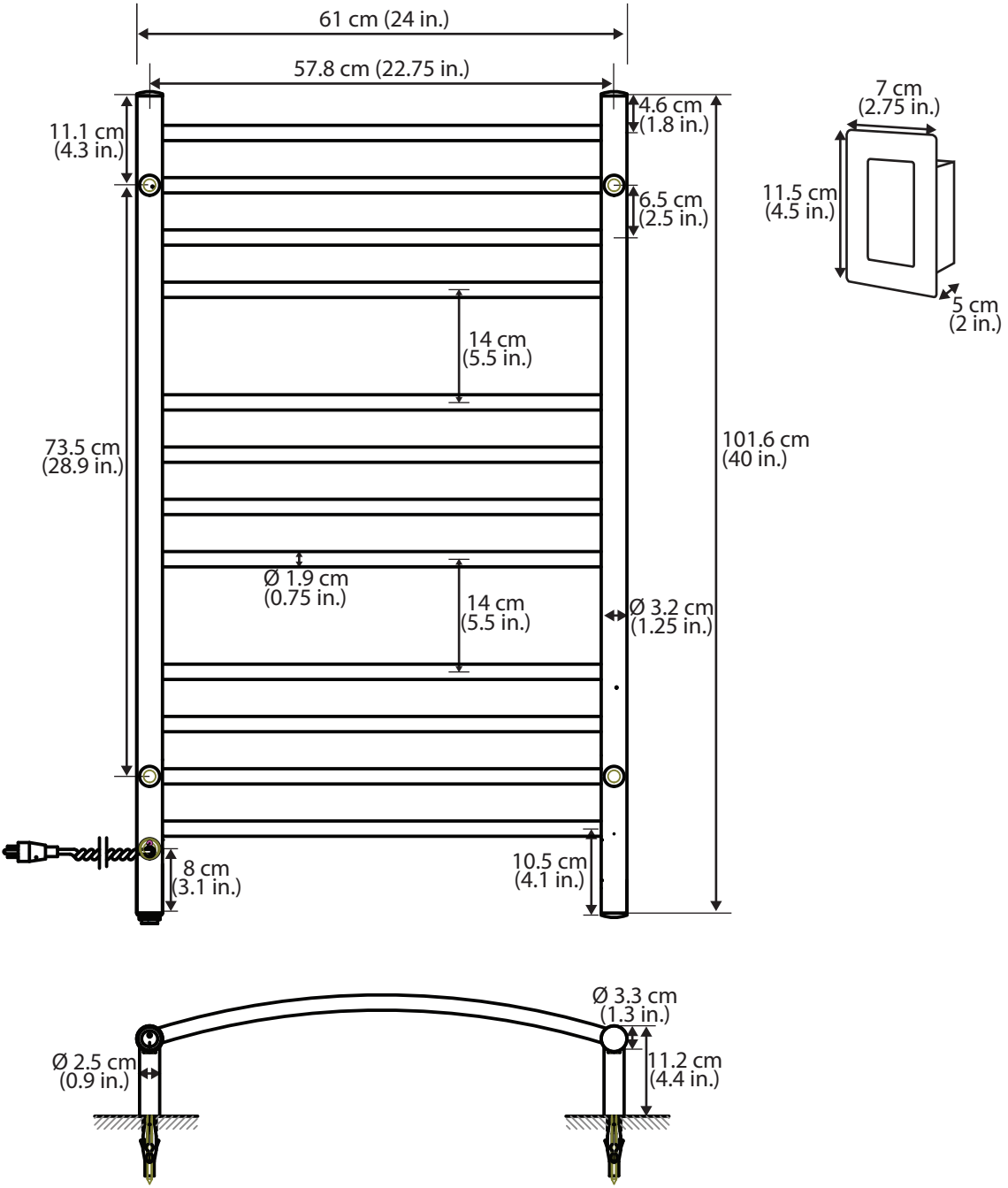
61 cm (24 in.)
57.8 cm (22.75 in.)
11.1 cm
(4.3 in.)
4.6 cm
(1.8 in.)
6.5 cm
(2.5 in.)
14 cm
(5.5 in.)
73.5 cm
(28.9 in.)
101.6 cm
(40 in.)
Ø 1.9 cm
(0.75 in.)
14 cm
(5.5 in.)
Ø 3.2 cm
(1.25 in.)
8 cm
(3.1 in.)
10.5 cm
(4.1 in.)
7 cm
(2.75 in.)
11.5 cm
(4.5 in.)
5 cm
(2 in.)
Ø 3.3 cm
(1.3 in.)
Ø 2.5 cm
(0.9 in.)
11.2 cm
(4.4 in.)