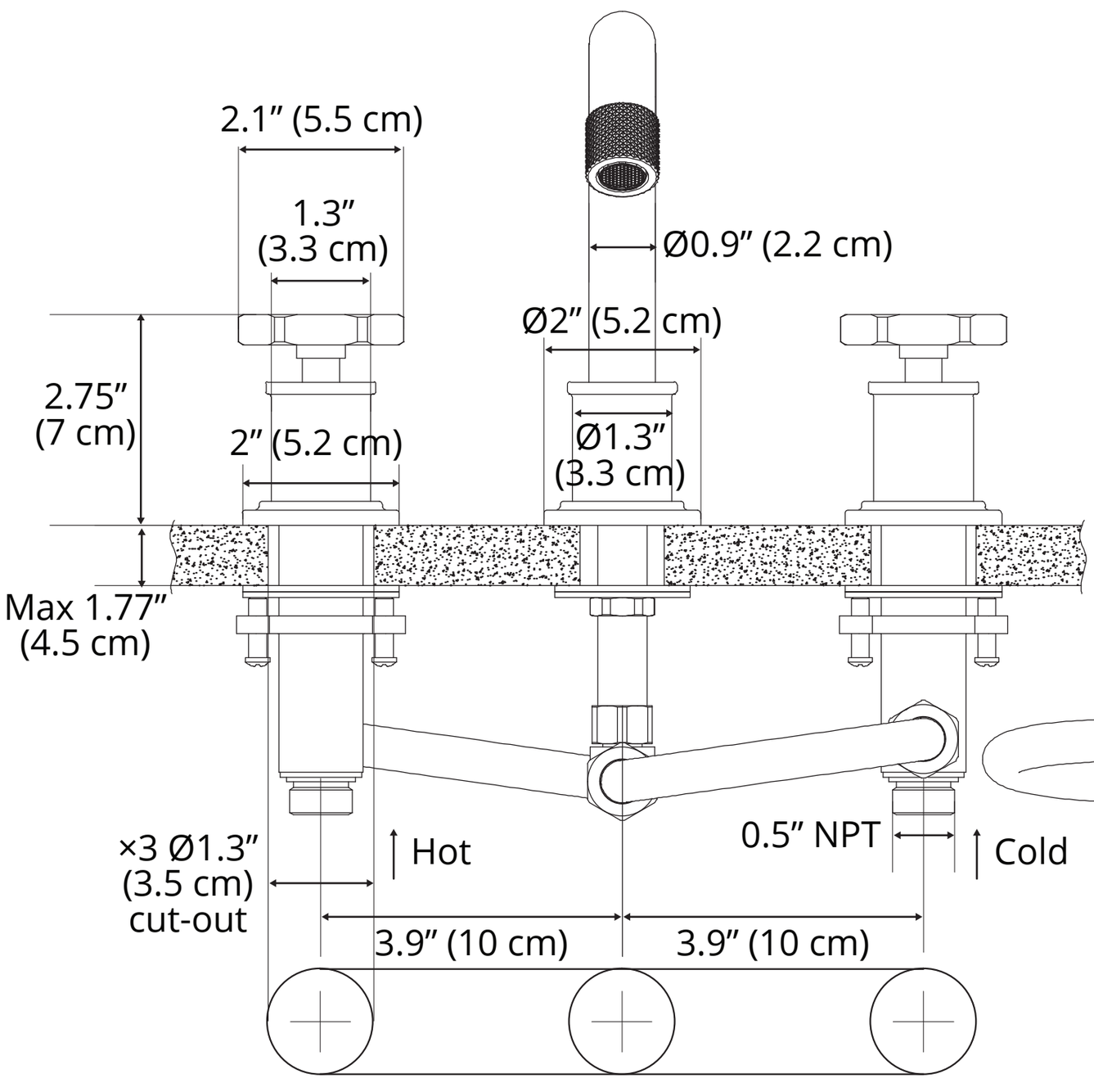
2.1″ (5.5 cm)
1.3″
(3.3 cm)
Ø0.9″ (2.2 cm)
Ø2″ (5.2 cm)
2.75″
(7 cm)
2″ (5.2 cm)
Ø1.3″
(3.3 cm)
Max 1.77″
(4.5 cm)
×3 Ø1.3″
(3.5 cm)
cut-out
Hot
0.5″ NPT
Cold
3.9″ (10 cm)
3.9″ (10 cm)

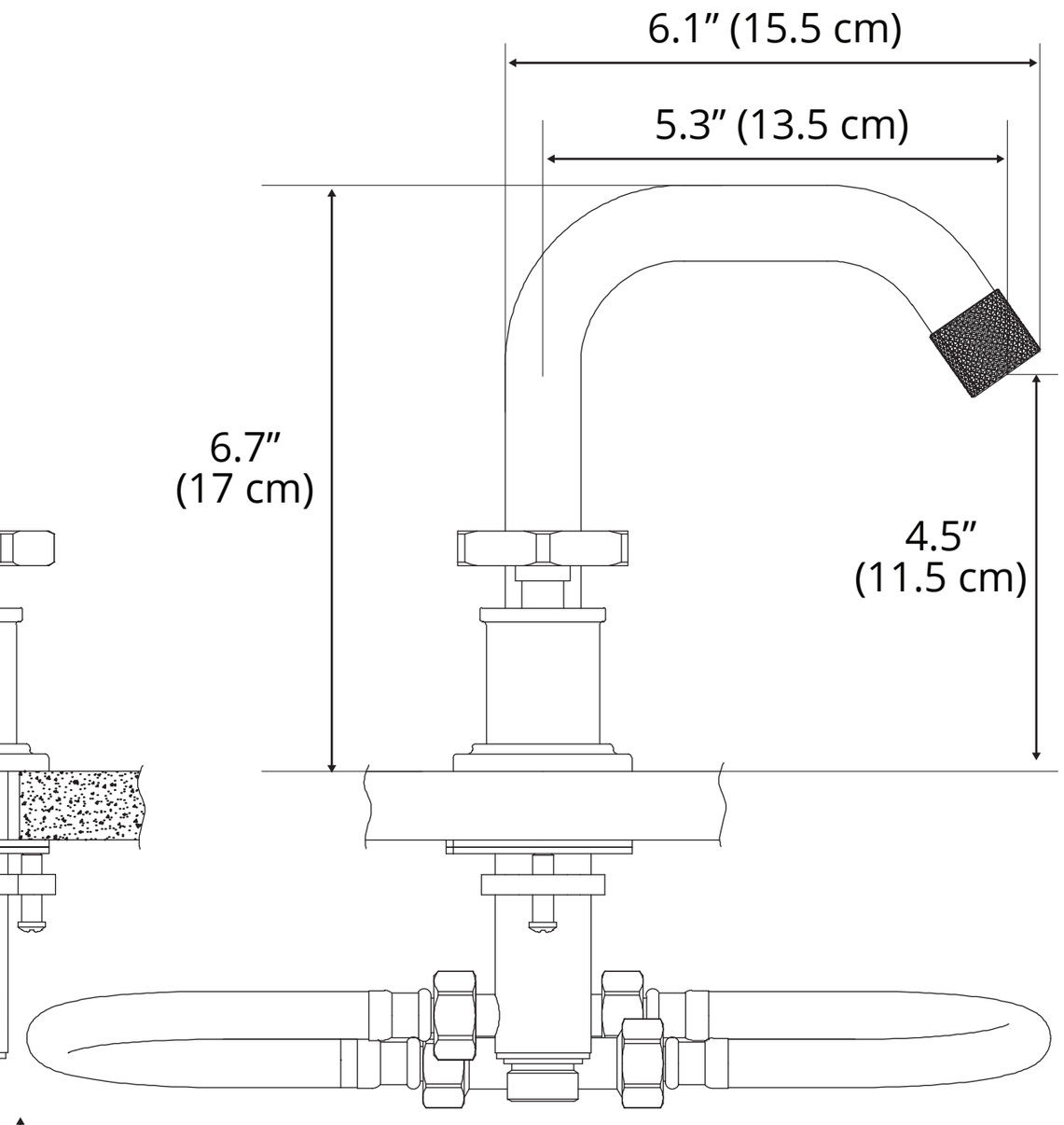
6.1″ (15.5 cm)
5.3″ (13.5 cm)
6.7″
(17 cm)
4.5″
(11.5 cm)