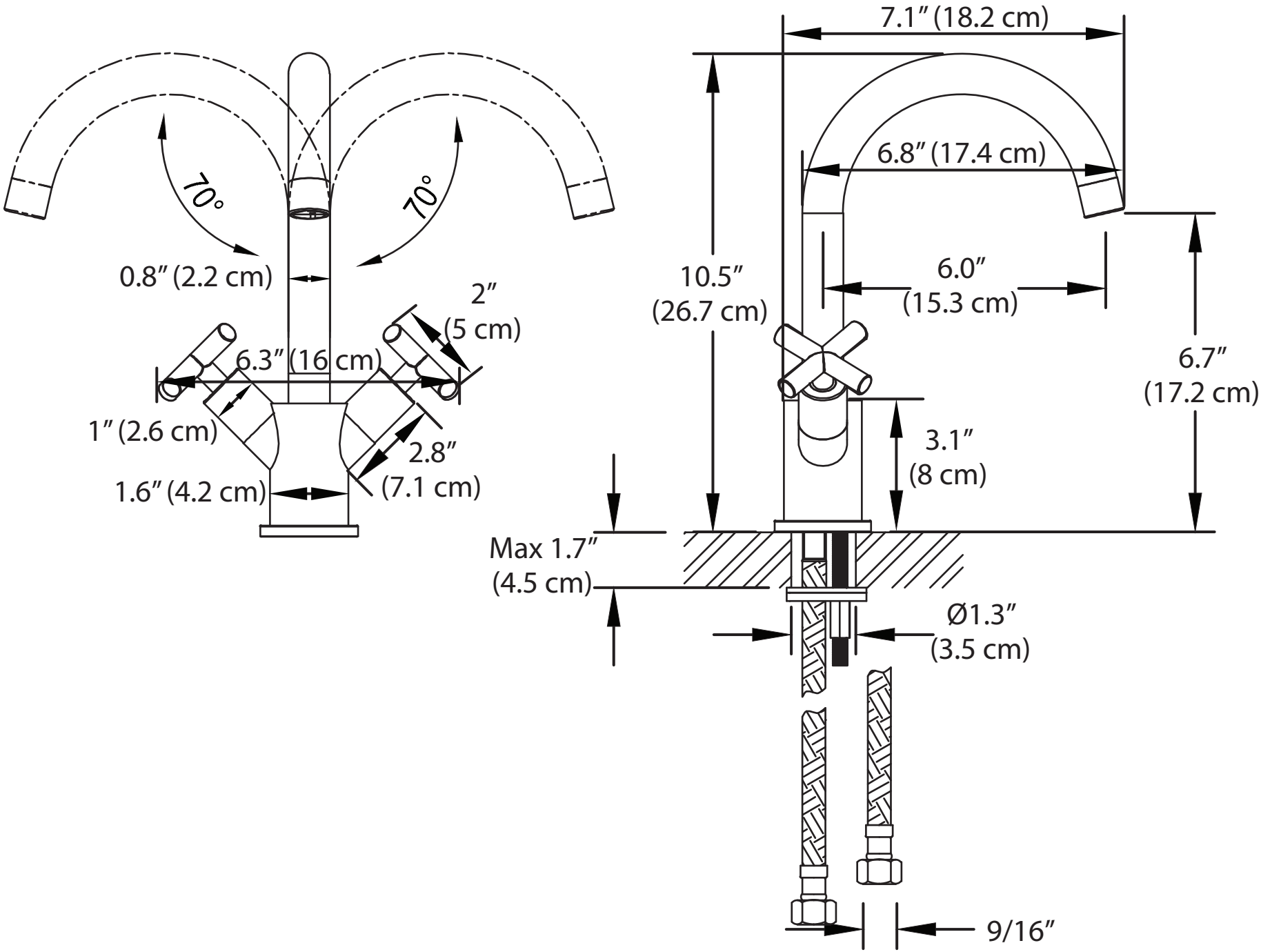
70°
70°
0.8″ (2.2 cm)
2″
(5 cm)
6.3″ (16 cm)
1″ (2.6 cm)
2.8″
(7.1 cm)
1.6″ (4.2 cm)
7.1″ (18.2 cm)
6.8″ (17.4 cm)
10.5″
(26.7 cm)
6.0″
(15.3 cm)
6.7″
(17.2 cm)
3.1″
(8 cm)
Max 1.7″
(4.5 cm)
Ø1.3″
(3.5 cm)
9/16″