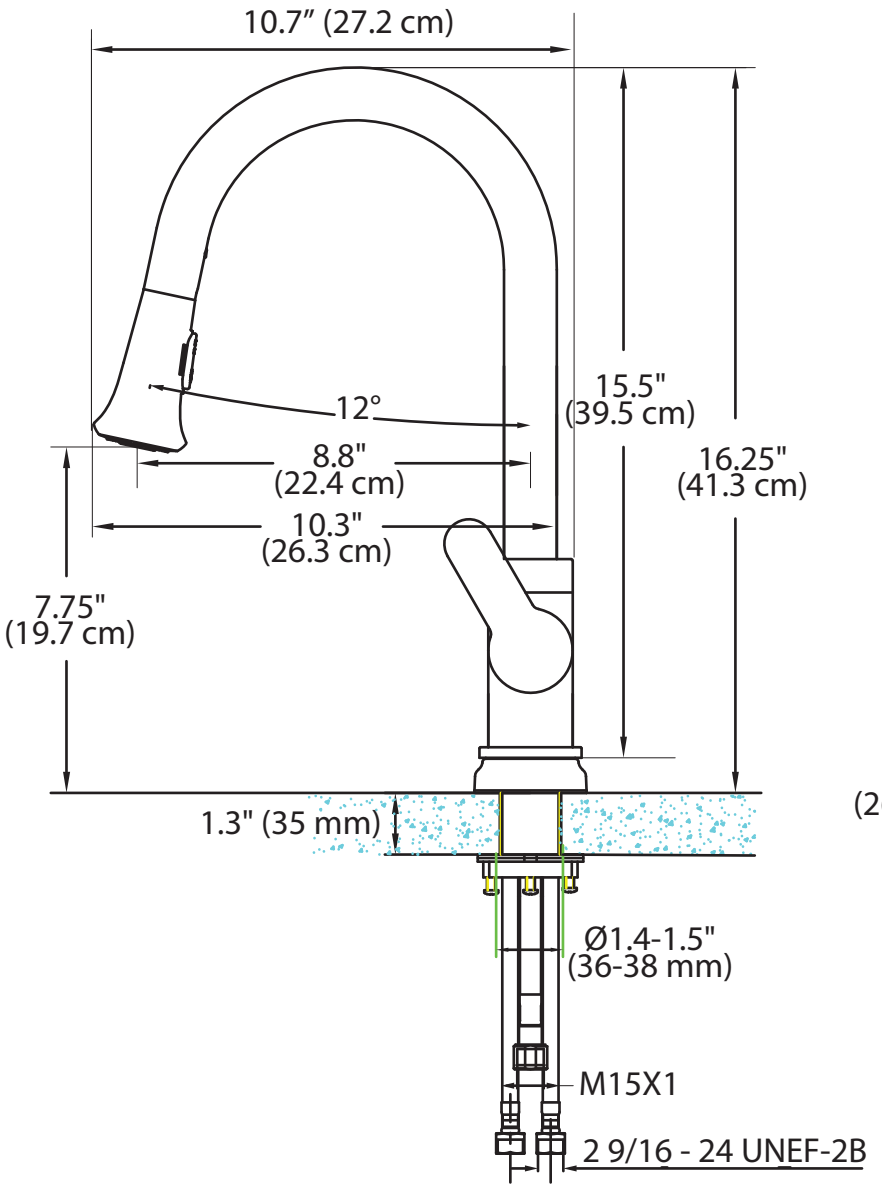
10.7″ (27.2 cm)
12°
15.5"
(39.5 cm)
16.25"
(41.3 cm)
8.8"
(22.4 cm)
10.3"
(26.3 cm)
7.75"
(19.7 cm)
1.3" (35 mm)
Ø1.4-1.5"
(36-38 mm)
M15X1
2 9/16 - 24 UNEF-2B

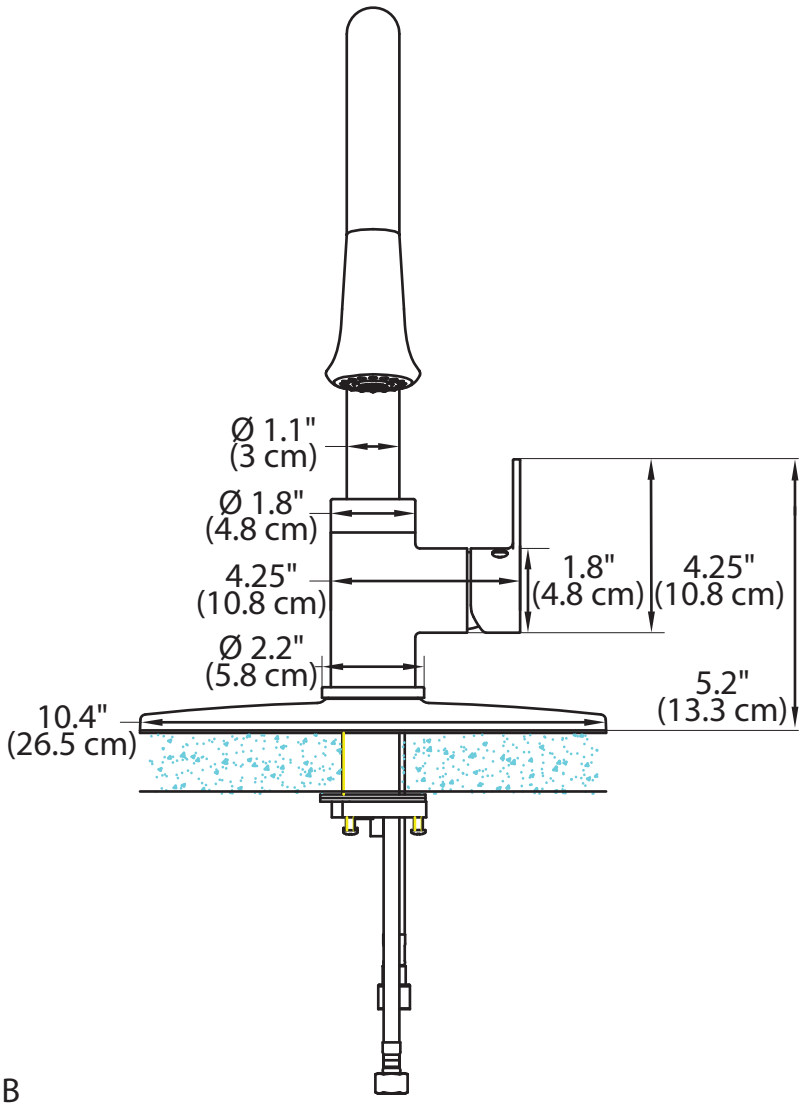
Ø 1.1"
(3 cm)
Ø 1.8"
(4.8 cm)
4.25"
(10.8 cm)
1.8"
(4.8 cm)
4.25"
(10.8 cm)
Ø 2.2"
(5.8 cm)
5.2"
(13.3 cm)
10.4"
(26.5 cm)