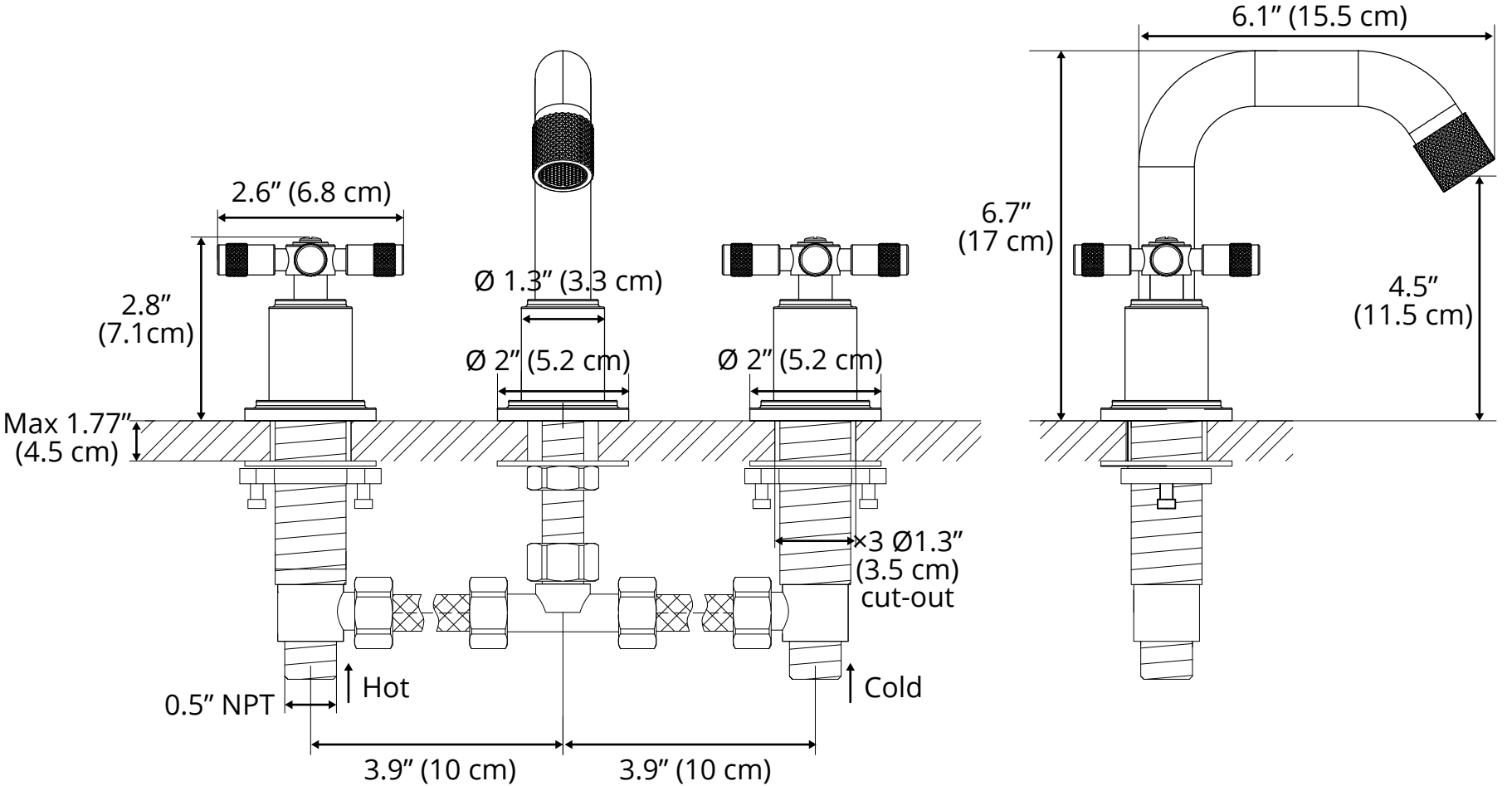
6.1″ (15.5 cm)
2.6″ (6.8 cm)
6.7″
(17 cm)
Ø 1.3″ (3.3 cm)
2.8″
(7.1cm)
4.5″
(11.5 cm)
Ø 2″ (5.2 cm)
Ø 2″ (5.2 cm)
Max 1.77″
(4.5 cm)
×3 Ø1.3″
(3.5 cm)
cut-out
Hot
Cold
0.5″ NPT
3.9″ (10 cm)
3.9″ (10 cm)