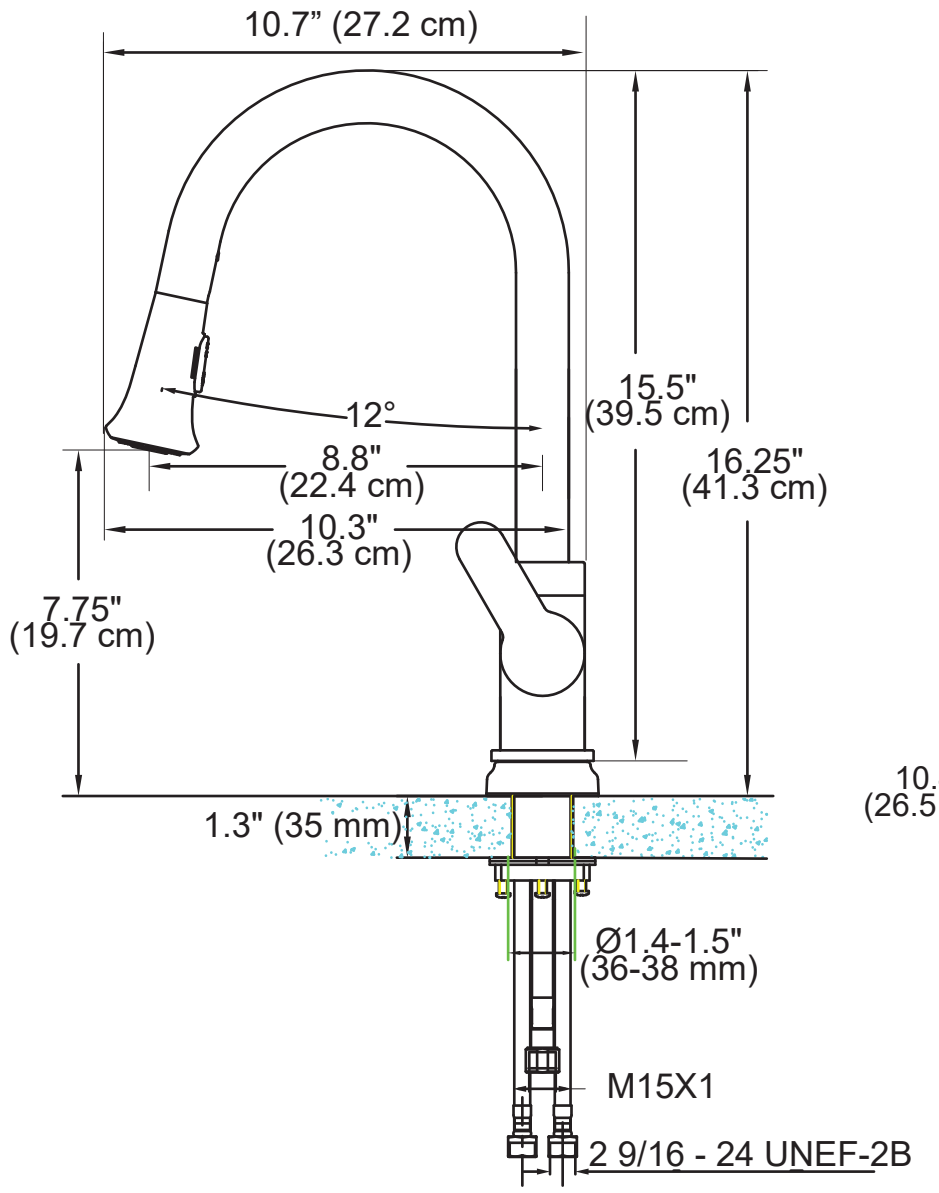

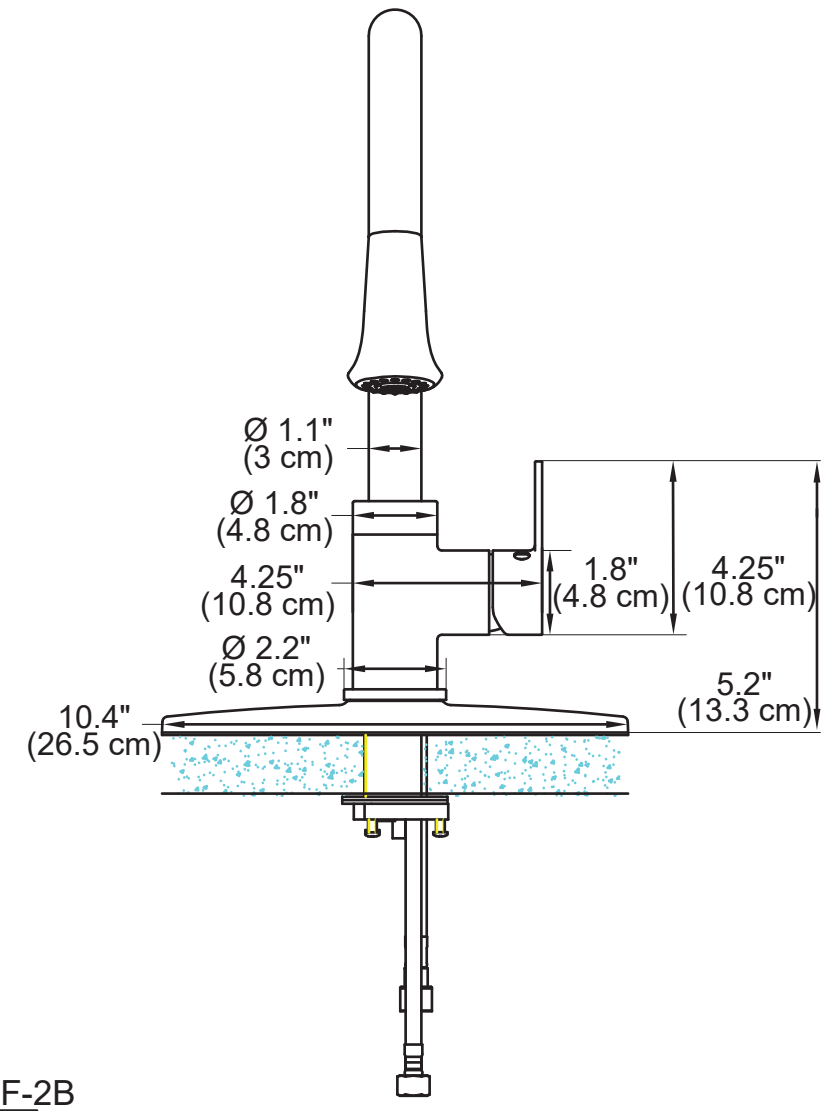

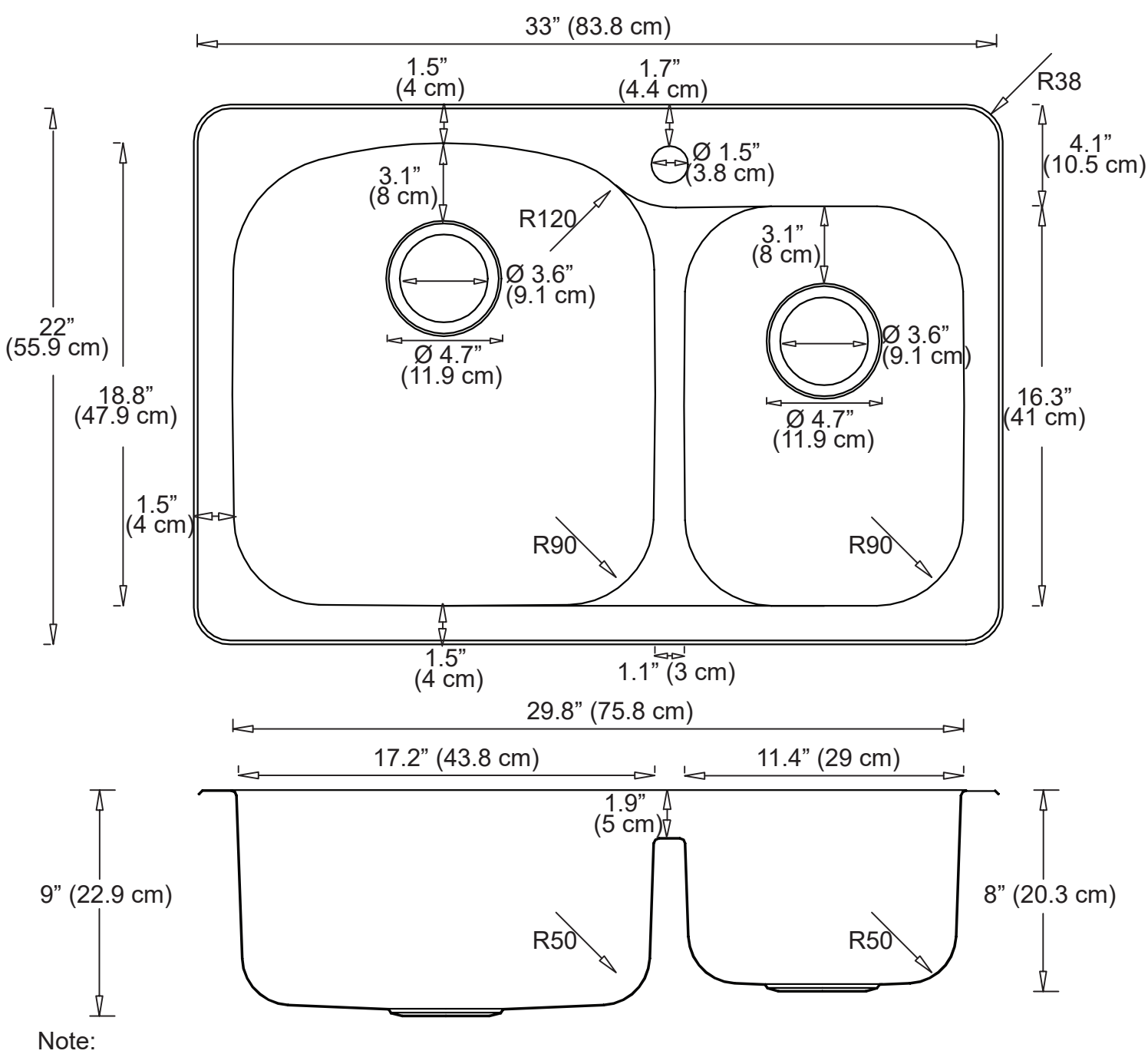

Note:
Tail piece and drain pipe adapter not included as pipe diameters vary.