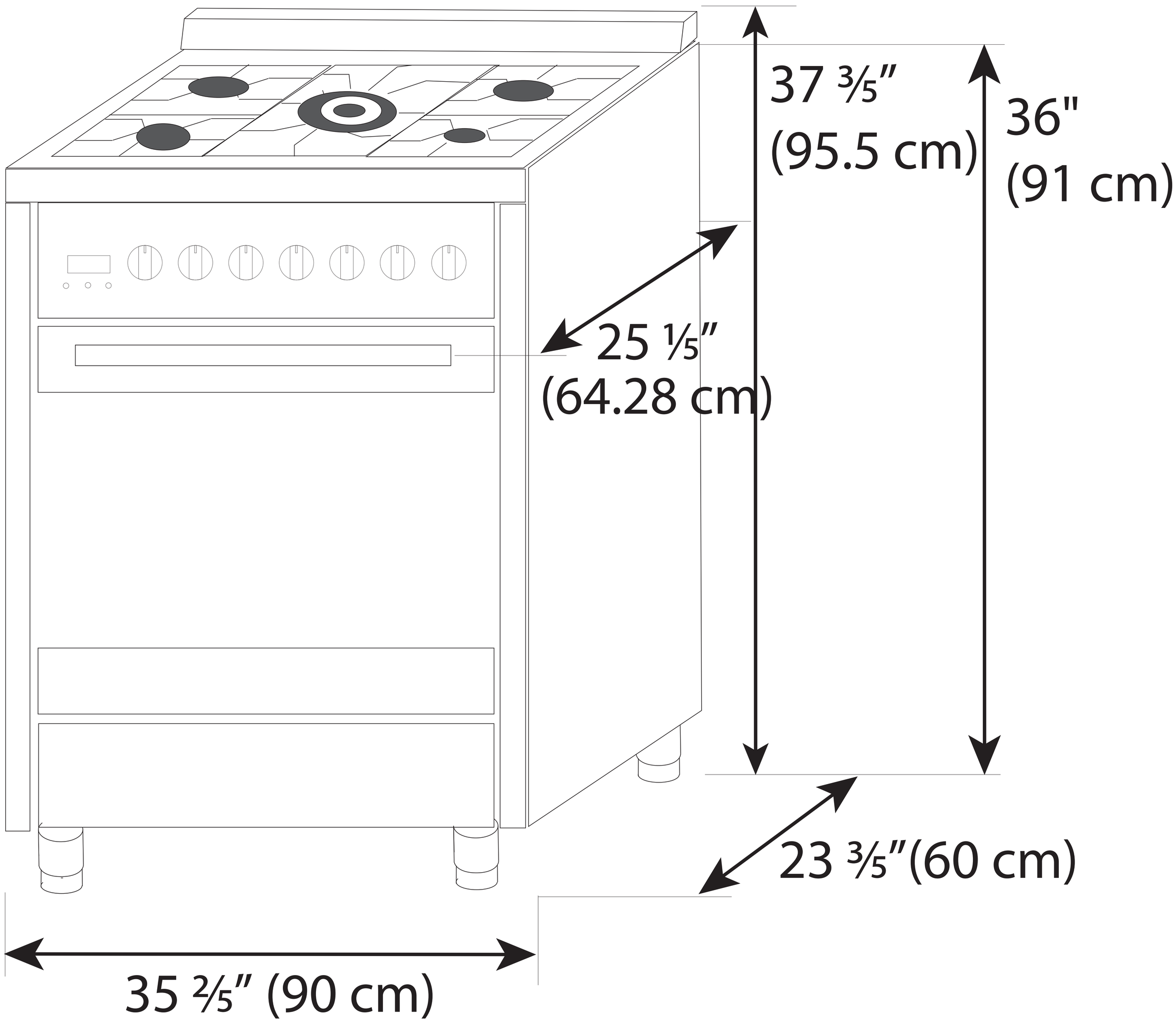
37 3⁄5"
(95.5 cm)
36"
(91 cm)
25 1⁄5"
(64.28 cm)
23 3⁄5"(60 cm)
35 2⁄5" (90 cm)