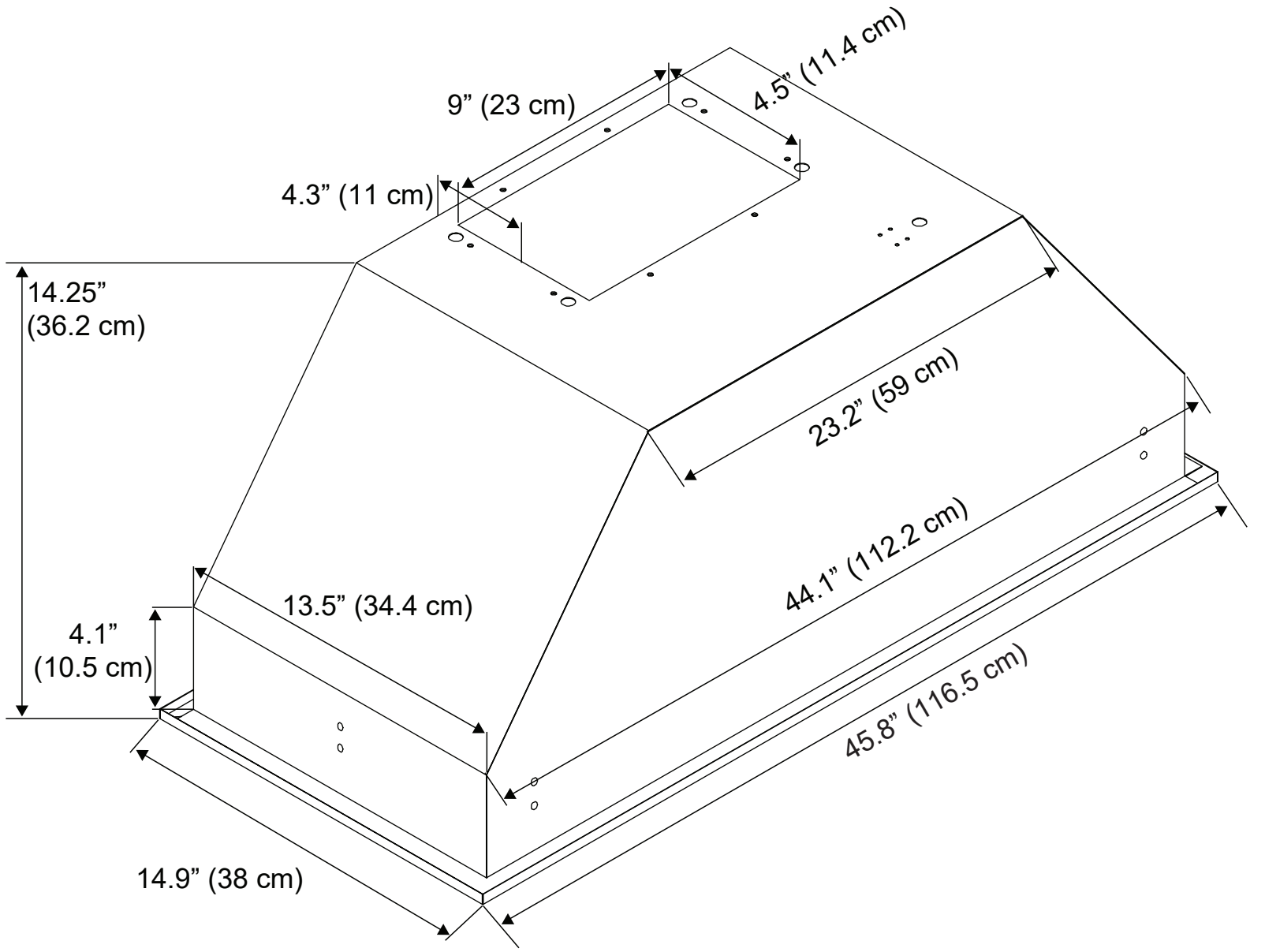
9” (23 cm)
4.5” (11.4 cm)
4.3” (11 cm)
14.25”
(36.2 cm)
23.2” (59 cm)
44.1” (112.2 cm)
13.5” (34.4 cm)
4.1”
(10.5 cm)
45.8” (116.5 cm)
14.9” (38 cm)

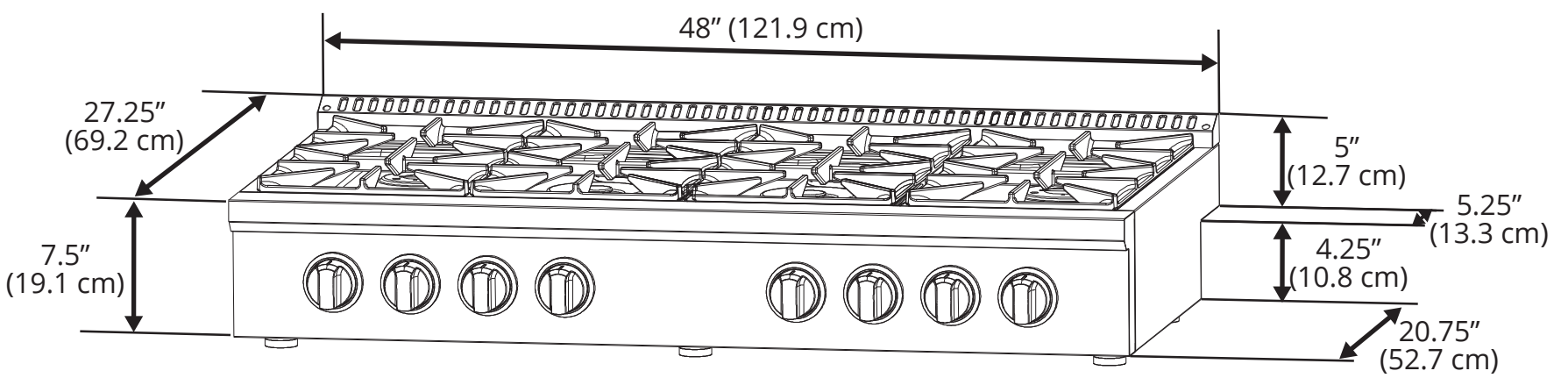
48” (121.9 cm)
27.25”
(69.2 cm)
5”
(12.7 cm)
5.25”
(13.3 cm)
7.5”
(19.1 cm)
4.25”
(10.8 cm)
20.75”
(52.7 cm)

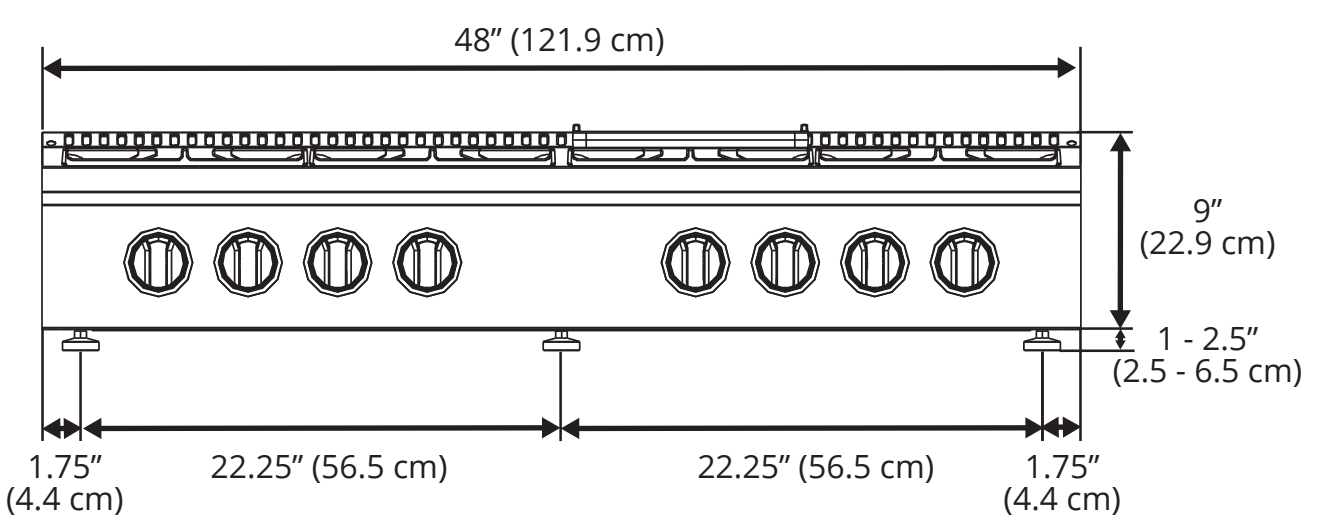
48” (121.9 cm)
9”
(22.9 cm)
1 - 2.5”
(2.5 - 6.5 cm)
1.75”
(4.4 cm)
22.25” (56.5 cm)
22.25” (56.5 cm)
1.75”
(4.4 cm)