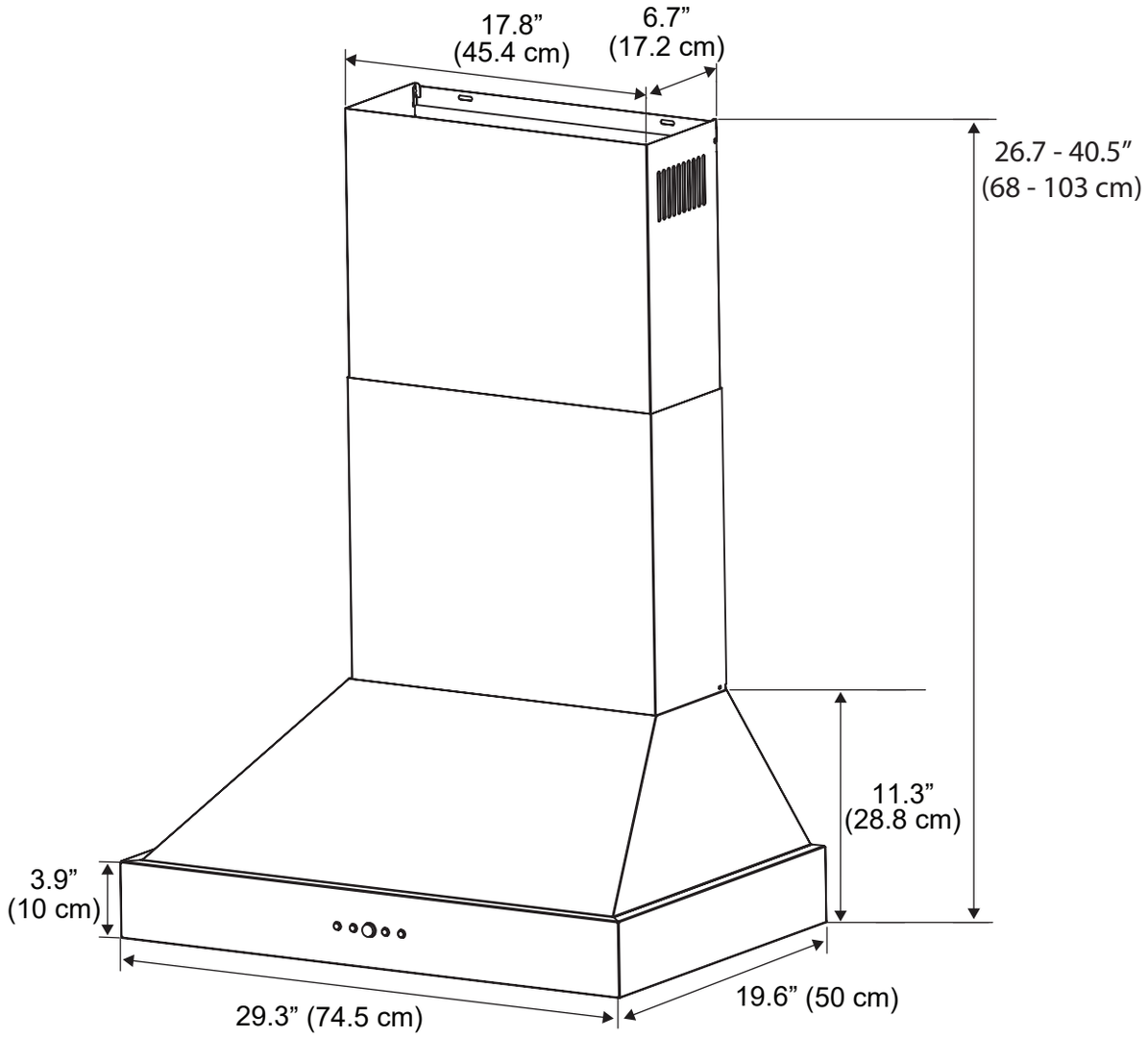
17.8”
(45.4 cm)
6.7”
(17.2 cm)
26.7 - 40.5”
(68 - 103 cm)
11.3”
(28.8 cm)
3.9”
(10 cm)
29.3” (74.5 cm)
19.6” (50 cm)

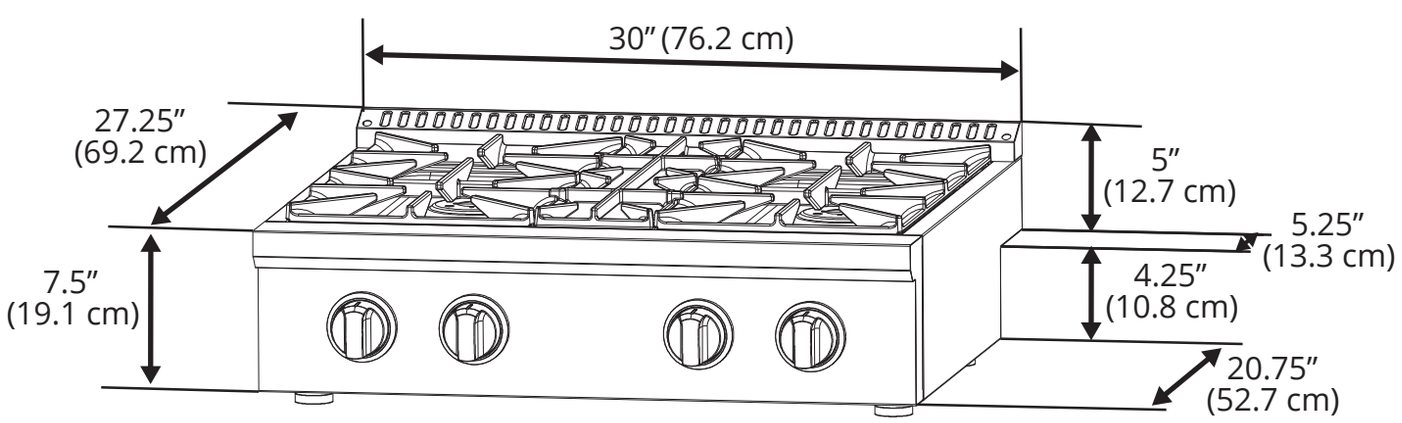
30” (76.2 cm)
27.25”
(69.2 cm)
5”
(12.7 cm)
5.25”
(13.3 cm)
7.5”
(19.1 cm)
4.25”
(10.8 cm)
20.75”
(52.7 cm)

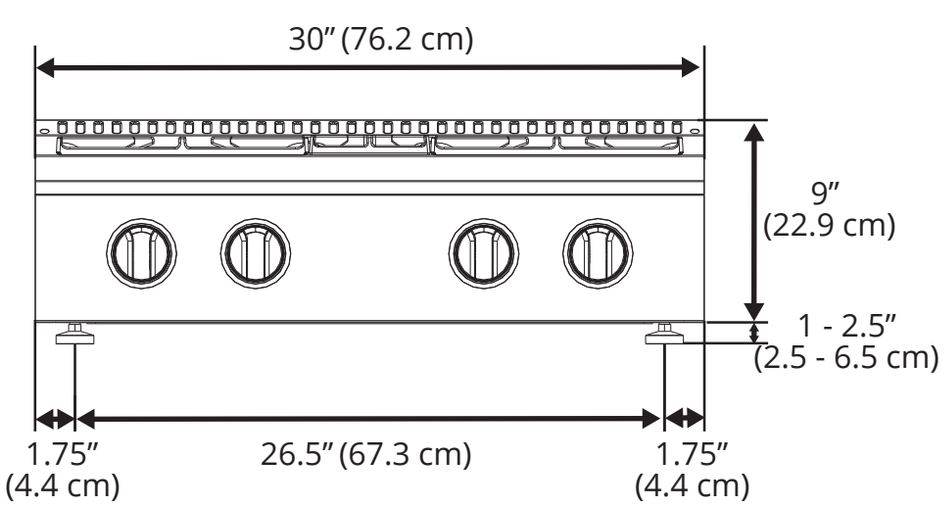
30” (76.2 cm)
9”
(22.9 cm)
1 - 2.5”
(2.5 - 6.5 cm)
1.75”
(4.4 cm)
26.5” (67.3 cm)
1.75”
(4.4 cm)