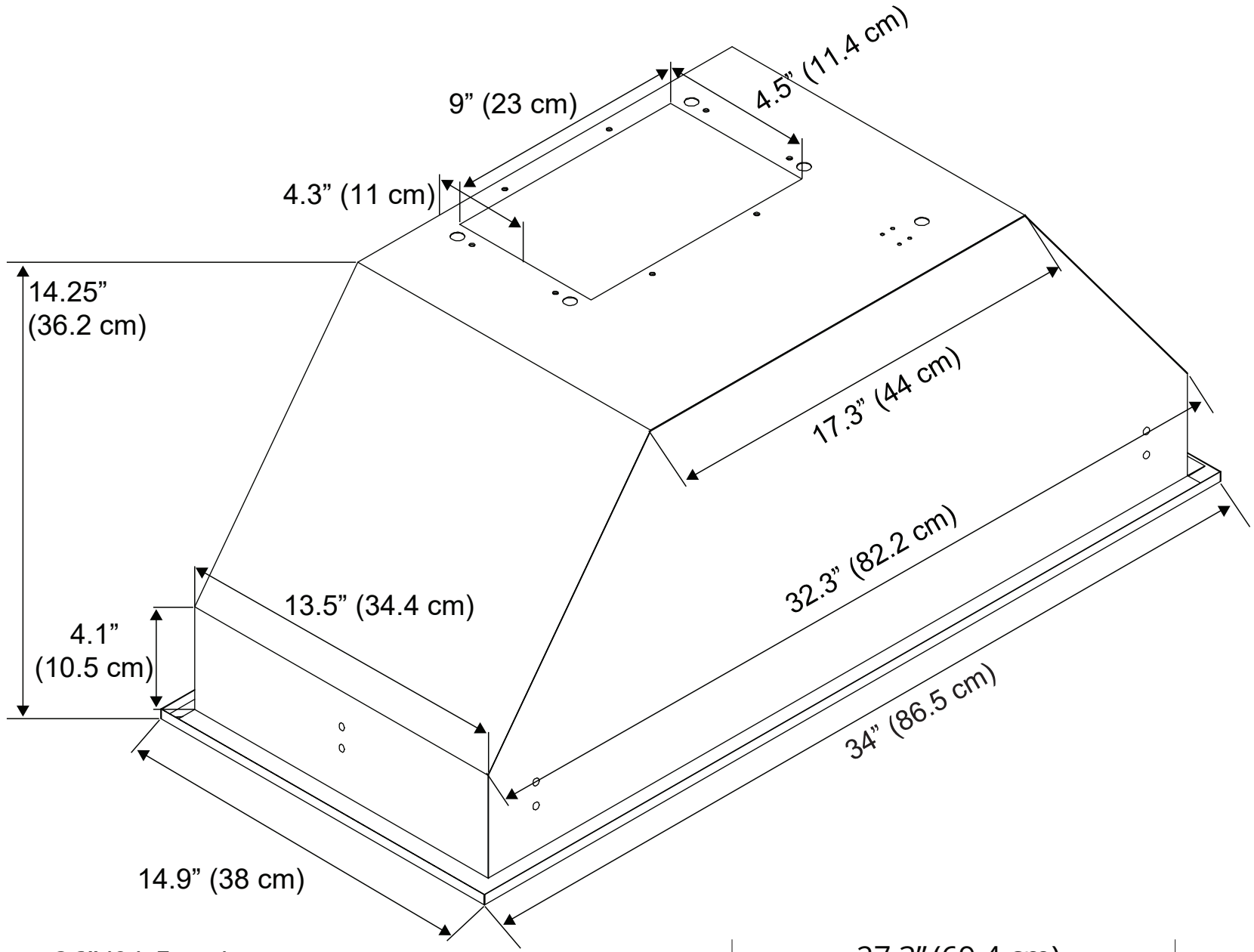
9” (23 cm)
4.5” (11.4 cm)
4.3” (11 cm)
14.25”
(36.2 cm)
17.3” (44 cm)
32.3” (82.2 cm)
13.5” (34.4 cm)
4.1”
(10.5 cm)
34” (86.5 cm)
14.9” (38 cm)

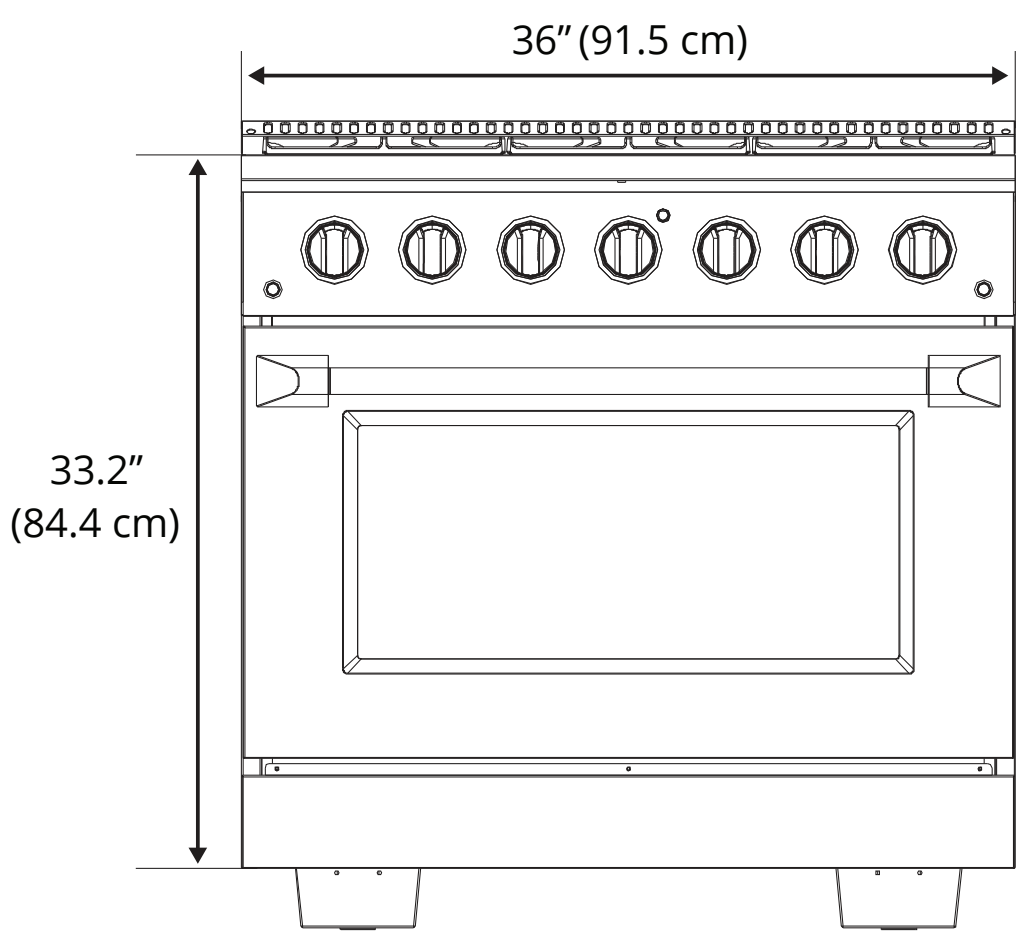
36” (91.5 cm)
33.2”
(84.4 cm)

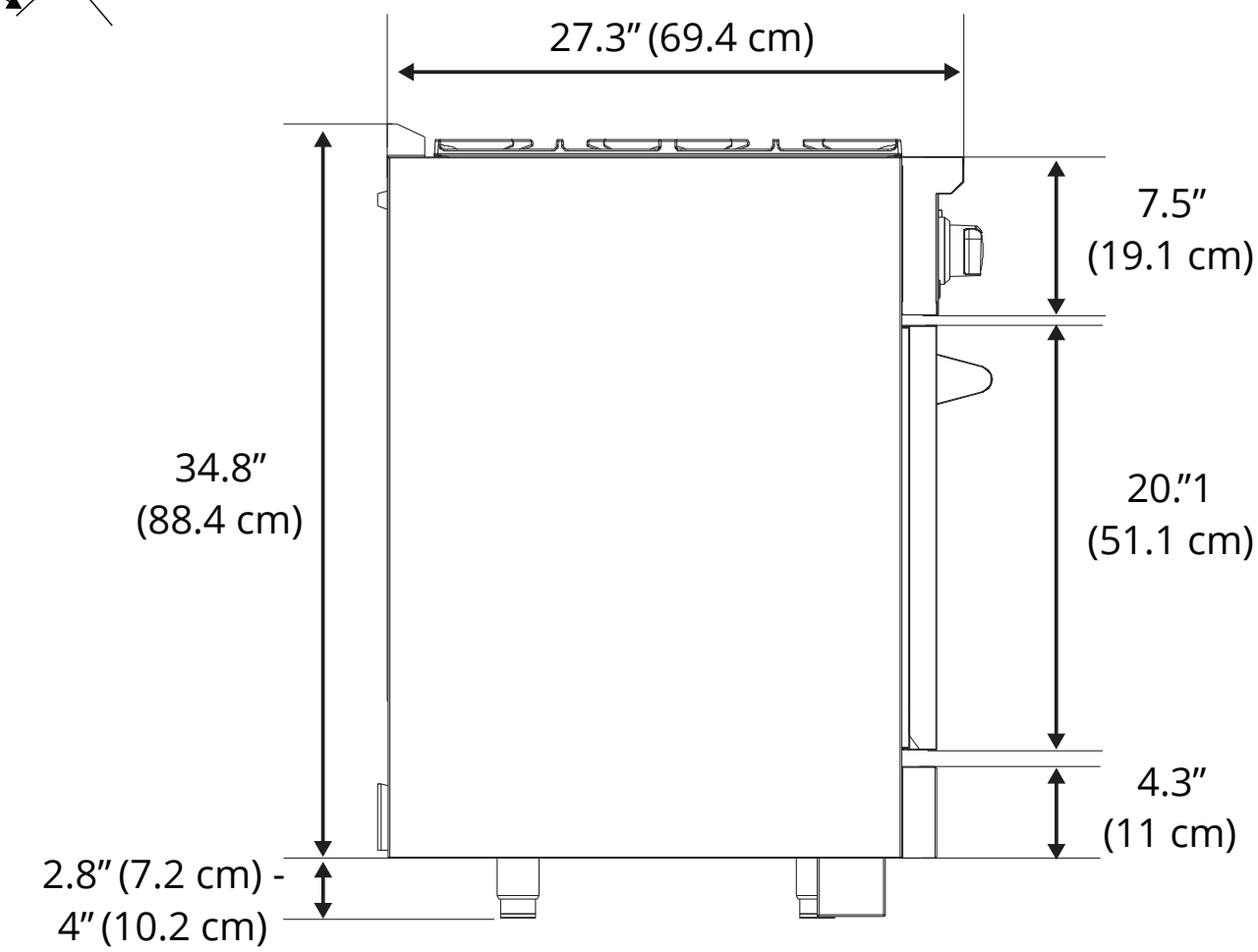
27.3” (69.4 cm)
7.5”
(19.1 cm)
34.8”
(88.4 cm)
20.”1
(51.1 cm)
4.3”
(11 cm)
2.8” (7.2 cm) -
4” (10.2 cm)