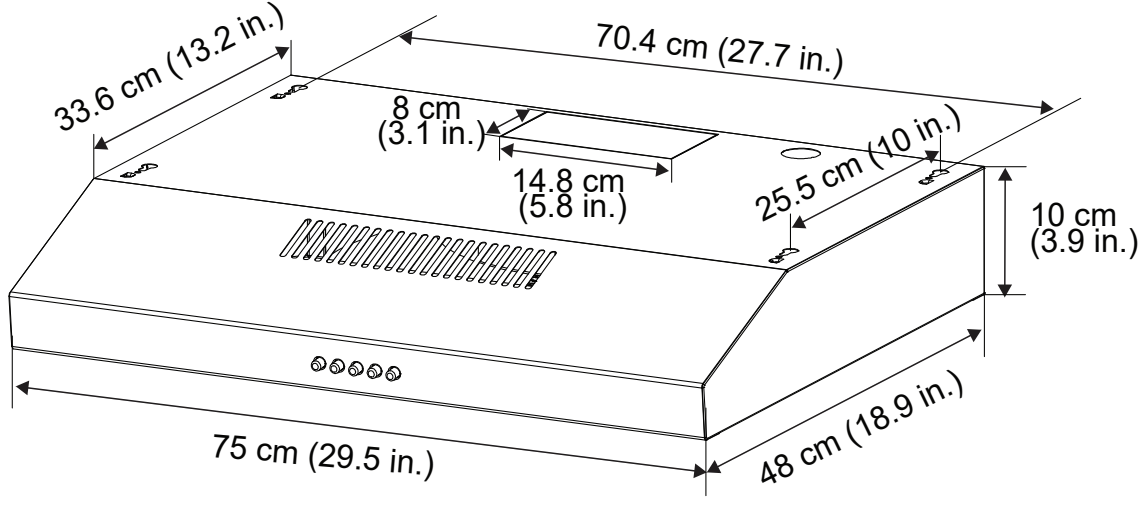
33.6 cm (13.2 in.)
70.4 cm (27.7 in.)
8 cm
(3.1 in.)
14.8 cm
(5.8 in.)
25.5 cm (10 in.)
10 cm
(3.9 in.)
75 cm (29.5 in.)
48 cm (18.9 in.)

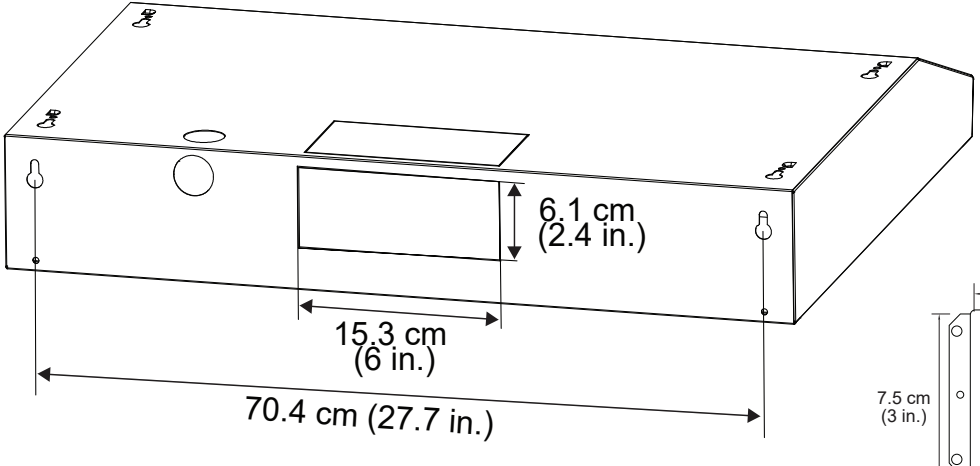
6.1 cm
(2.4 in.)
15.3 cm
(6 in.)
70.4 cm (27.7 in.)

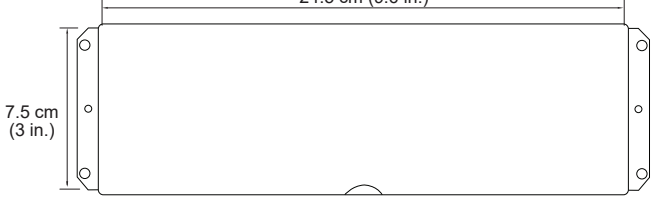
24.5 cm (9.6 in.)
7.5 cm
(3 in.)