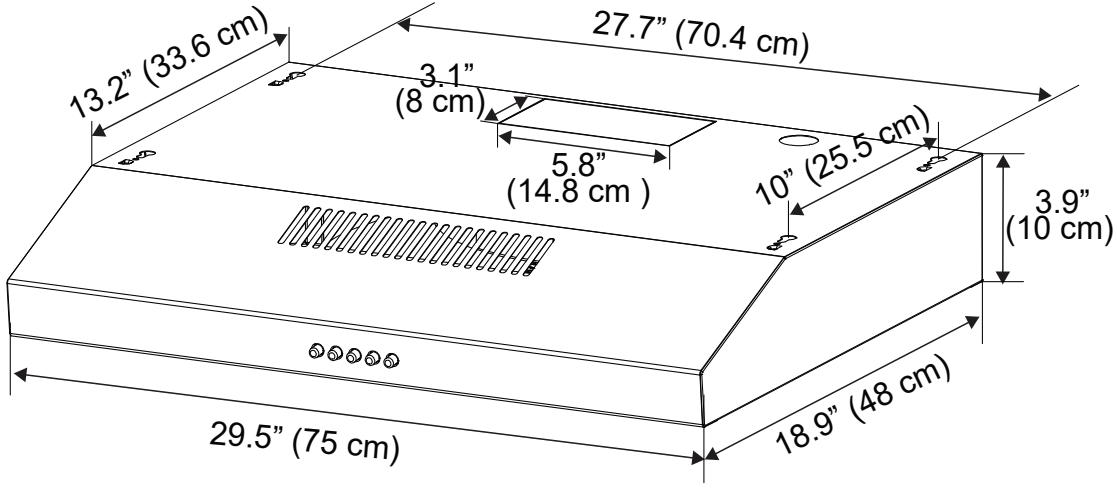
13.2” (33.6 cm)
27.7” (70.4 cm)
3.1”
(8 cm)
5.8”
(14.8 cm )
10” (25.5 cm)
3.9”
(10 cm)
29.5” (75 cm)
18.9” (48 cm)

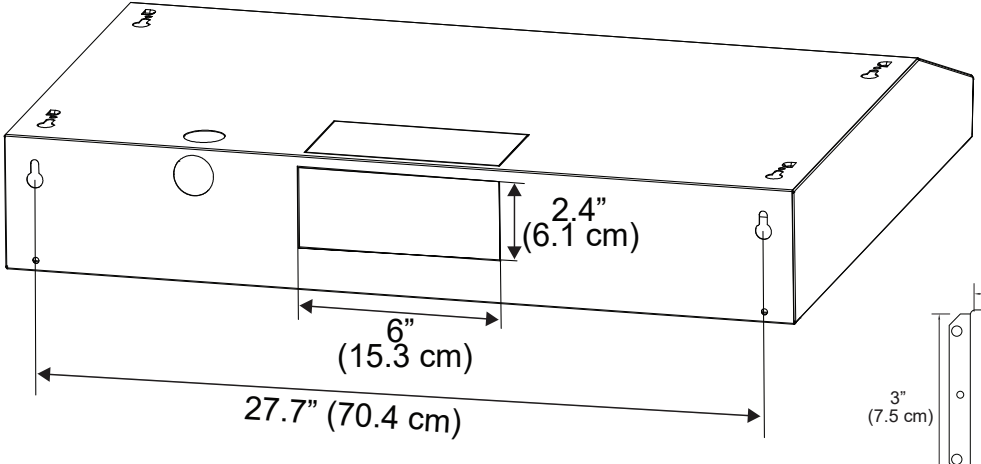
2.4”
(6.1 cm)
6”
(15.3 cm)
27.7” (70.4 cm)

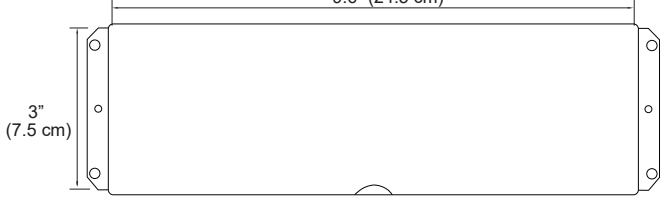
9.6” (24.5 cm)
3”
(7.5 cm)