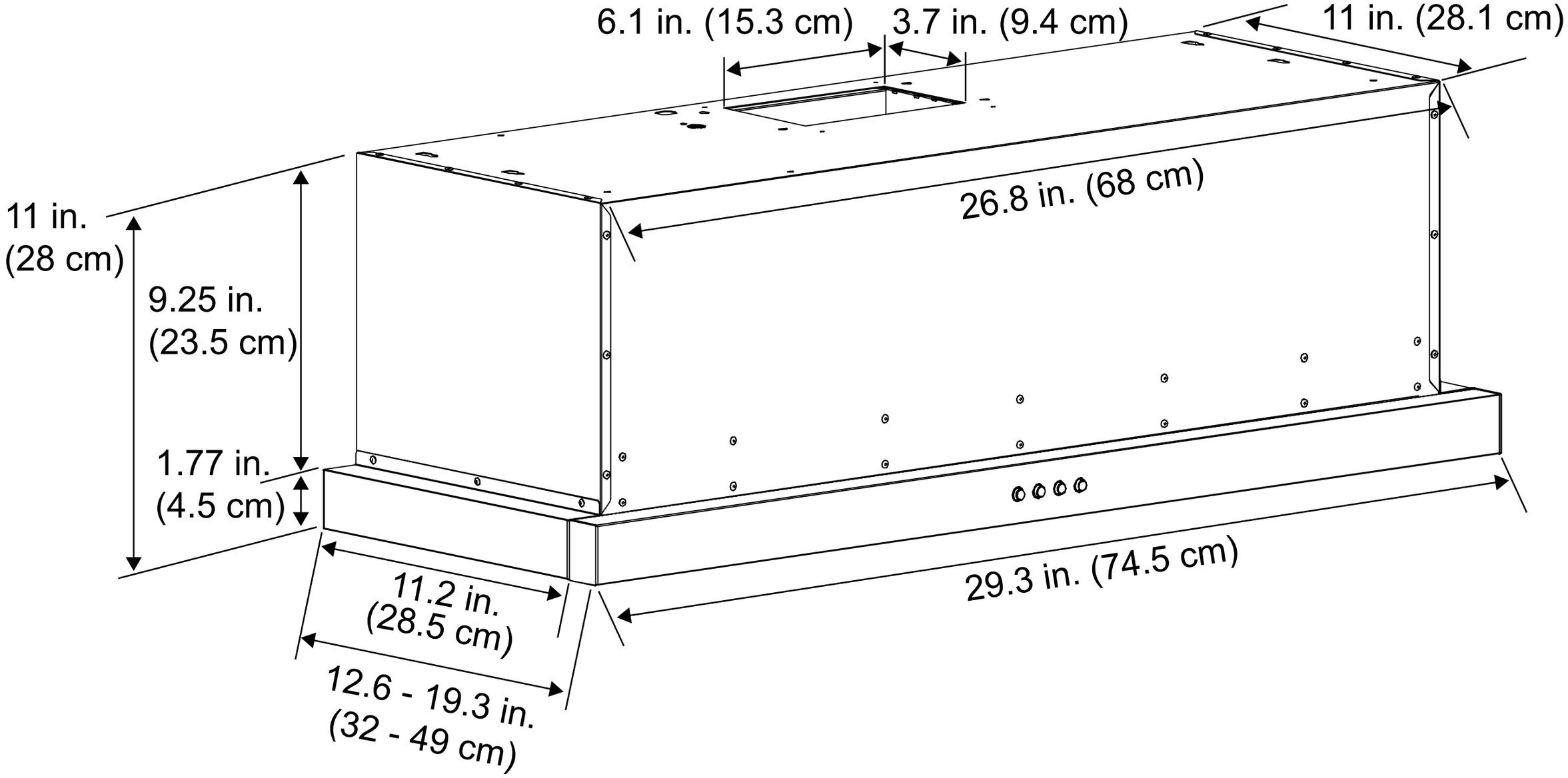
6.1 in. (15.3 cm)
3.7 in. (9.4 cm)
11 in. (28.1 cm)
26.8 in. (68 cm)
11 in.
(28 cm)
9.25 in.
(23.5 cm)
1.77 in.
(4.5 cm)
11.2 in.
(28.5 cm)
12.6 - 19.3 in.
(32 - 49 cm)
29.3 in. (74.5 cm)