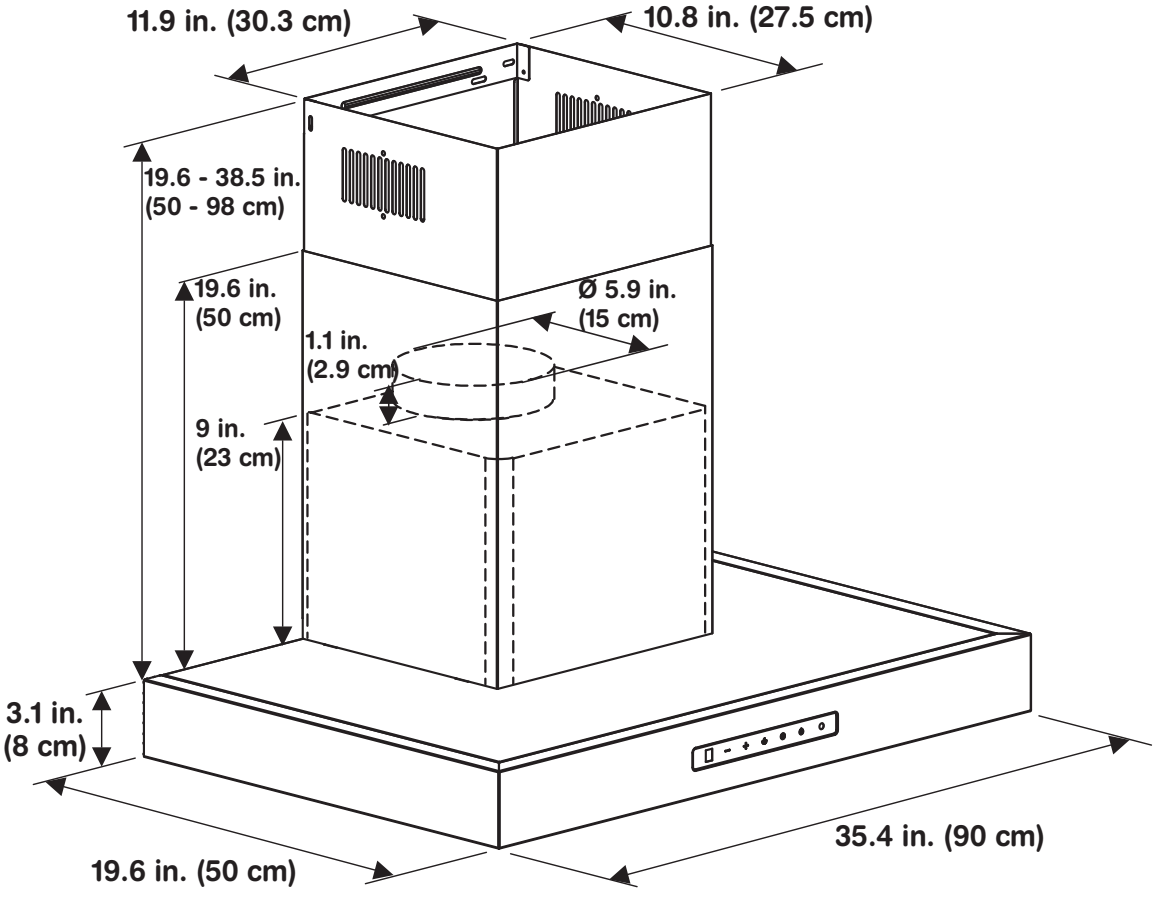
11.9 in. (30.3 cm)
10.8 in. (27.5 cm)
19.6 - 38.5 in.
(50 - 98 cm)
19.6 in.
(50 cm)
Ø 5.9 in.
(15 cm)
1.1 in.
(2.9 cm)
9 in.
(23 cm)
3.1 in.
(8 cm)
19.6 in. (50 cm)
35.4 in. (90 cm)