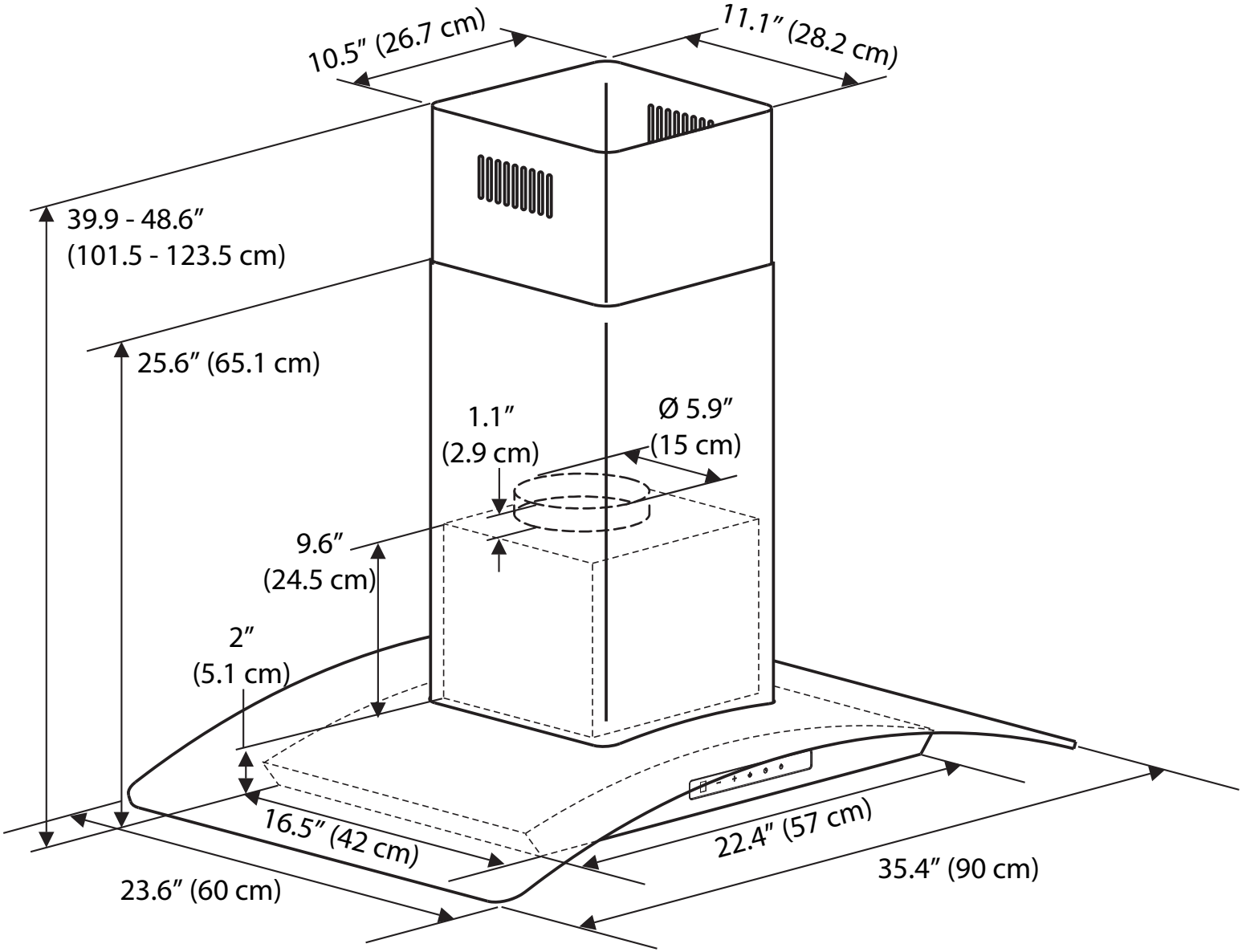
10.5″ (26.7 cm)
11.1″ (28.2 cm)
39.9 - 48.6″
(101.5 - 123.5 cm)
25.6″ (65.1 cm)
1.1″
(2.9 cm)
Ø 5.9″
(15 cm)
9.6″
(24.5 cm)
2″
(5.1 cm)
16.5″ (42 cm)
22.4″ (57 cm)
35.4″ (90 cm)
23.6″ (60 cm)