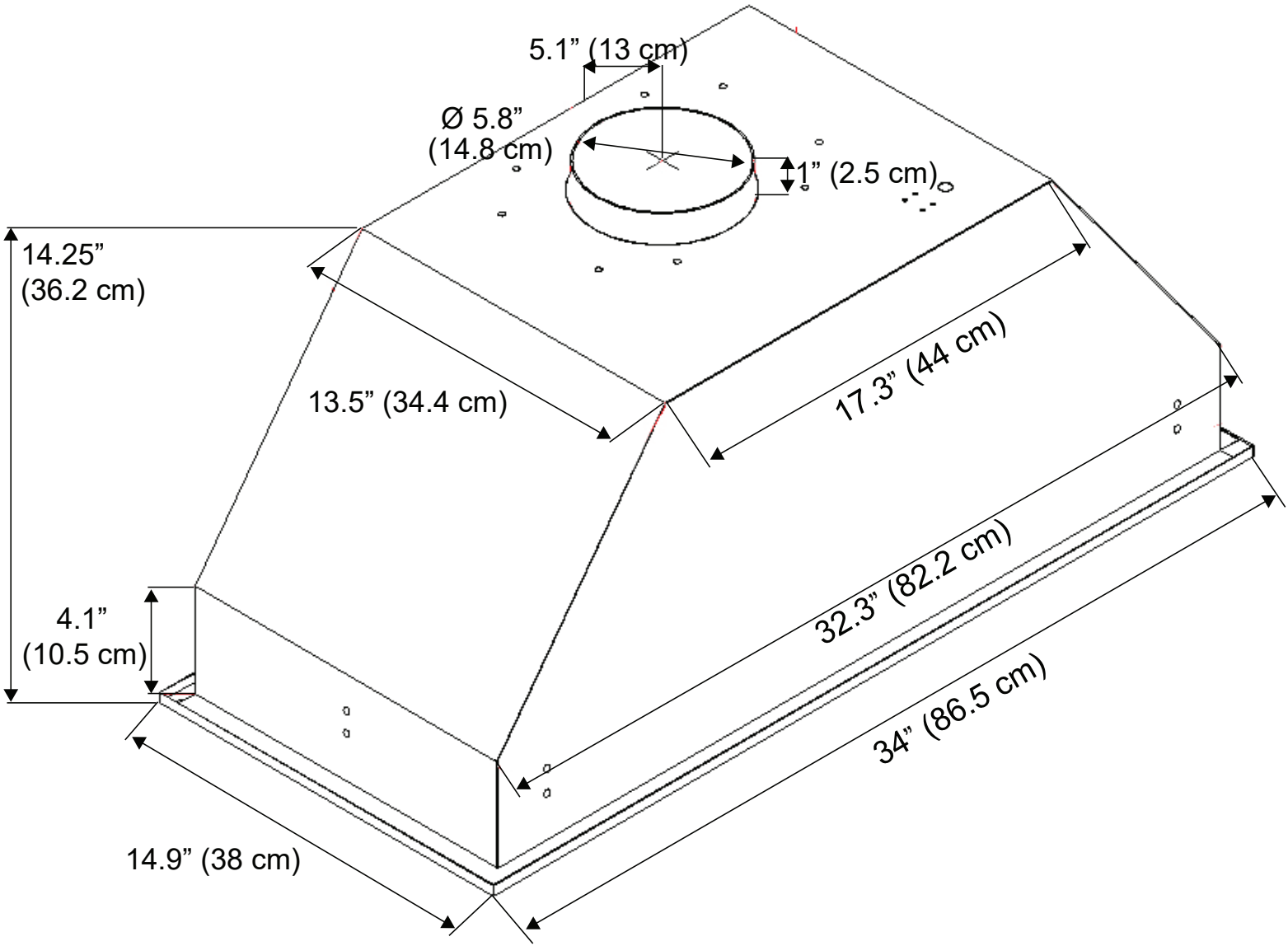
5.1” (13 cm)
Ø 5.8”
(14.8 cm)
1” (2.5 cm)
14.25”
(36.2 cm)
13.5” (34.4 cm)
17.3” (44 cm)
32.3” (82.2 cm)
34” (86.5 cm)
4.1”
(10.5 cm)
14.9” (38 cm)