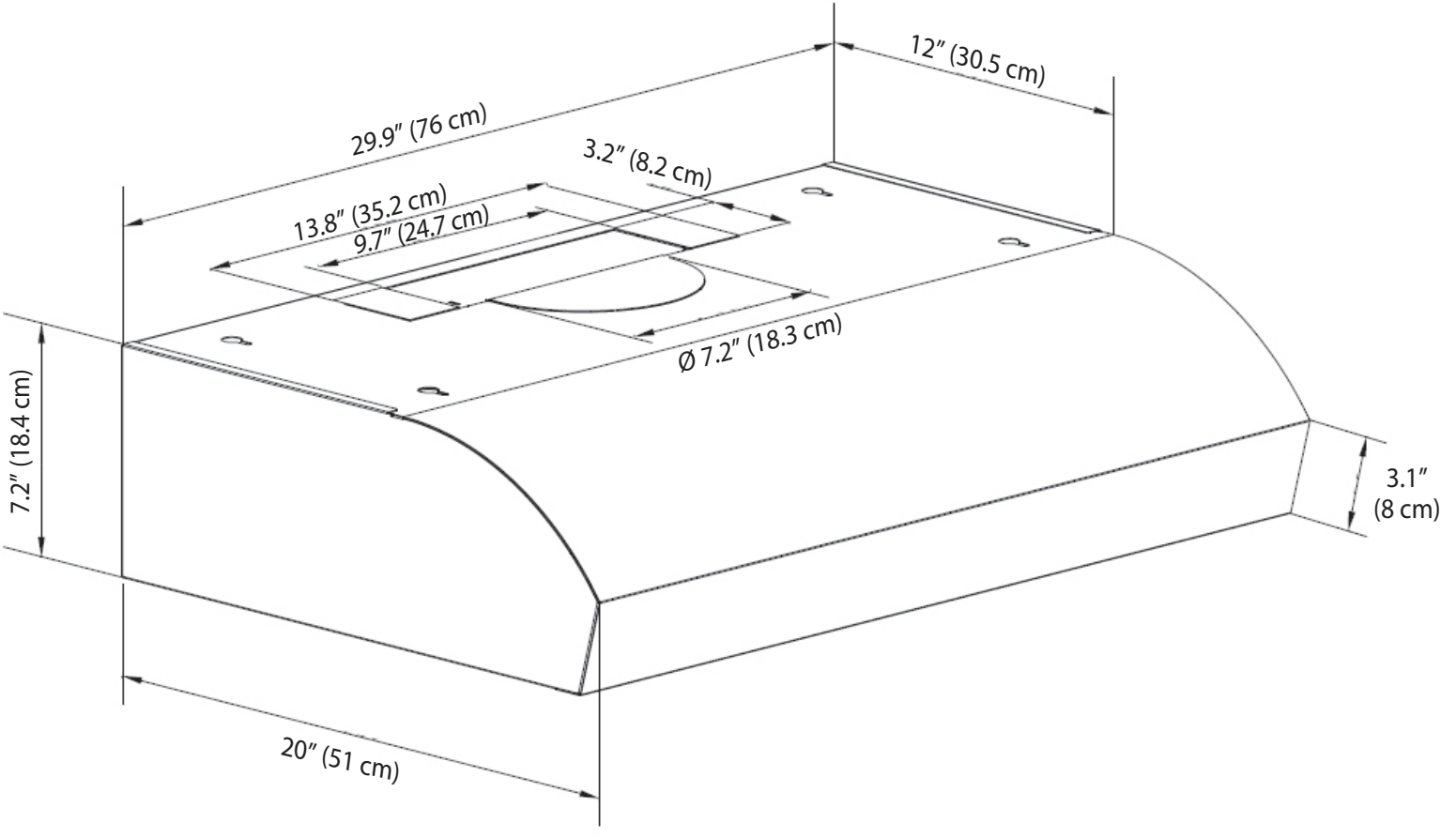
12″ (30.5 cm)
29.9″ (76 cm)
3.2″ (8.2 cm)
13.8″ (35.2 cm)
9.7″ (24.7 cm)
Ø 7.2″ (18.3 cm)
7.2″ (18.4 cm)
3.1″
(8 cm)
20″ (51 cm)

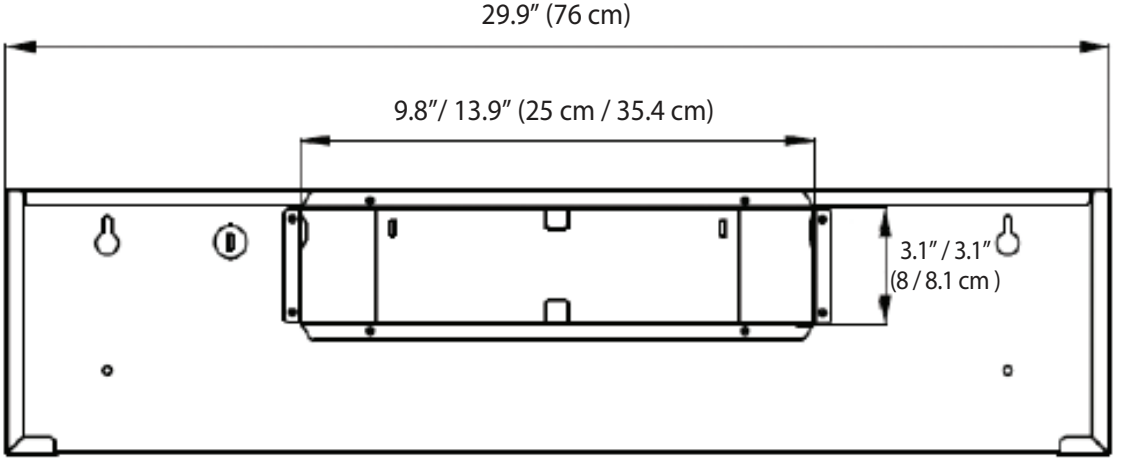
29.9″ (76 cm)
9.8″/ 13.9″ (25 cm / 35.4 cm)
3.1″ / 3.1″
(8 / 8.1 cm)