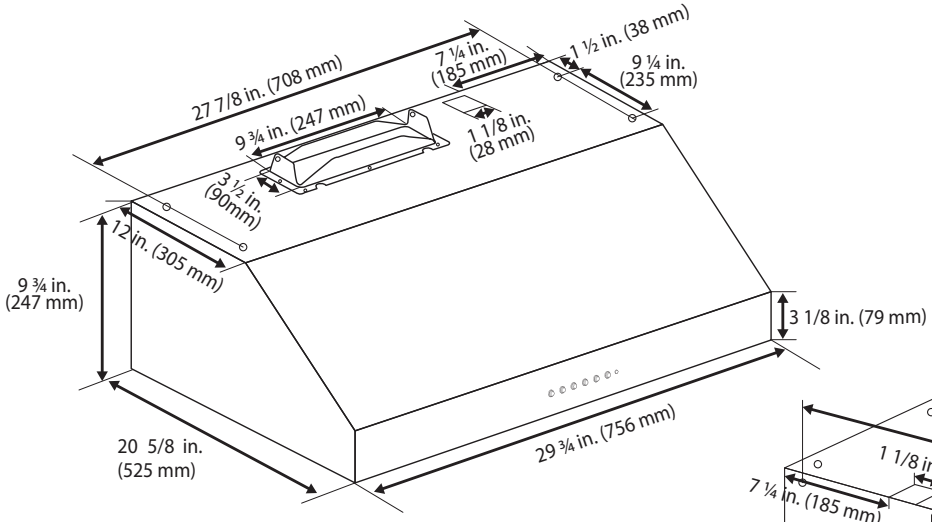
27 7/8 in. (708 mm)
7 ¼ in. (185 mm)
1 ½ in. (38 mm)
9 ¼ in. (235 mm)
9 ¾ in. (247 mm)
1 1/8 in. (28 mm)
3 ½ in. (90mm)
12 in. (305 mm)
9 ¾ in. (247 mm)
3 1/8 in. (79 mm)
20 5/8 in. (525 mm)
29 ¾ in. (756 mm)

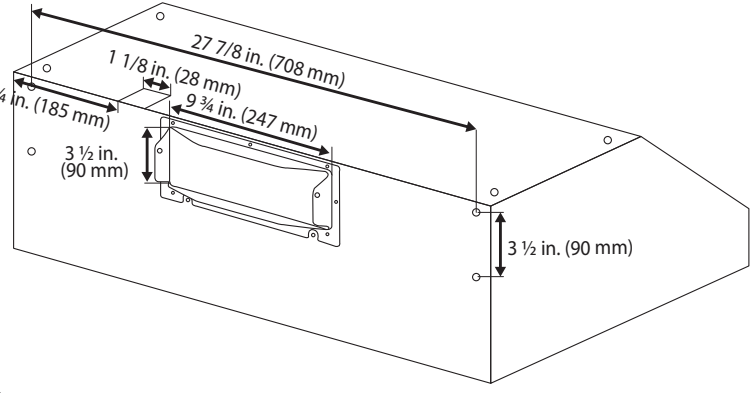
27 7/8 in. (708 mm)
1 1/8 in. (28 mm)
7 ¼ in. (185 mm)
9 ¾ in. (247 mm)
3 ½ in. (90 mm)
3 ½ in. (90 mm)

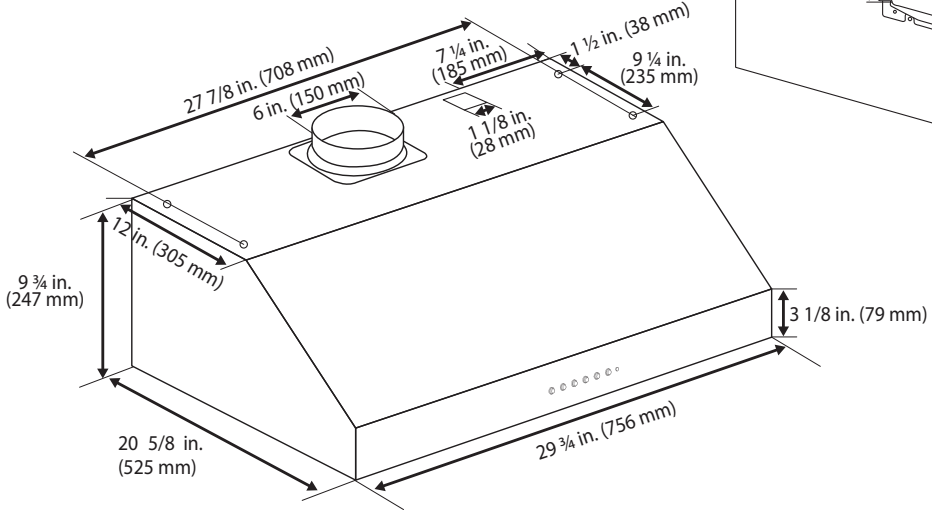
27 7/8 in. (708 mm)
6 in. (150 mm)
7 ¼ in. (185 mm)
1 ½ in. (38 mm)
9 ¼ in. (235 mm)
1 1/8 in. (28 mm)
12 in. (305 mm)
9 ¾ in. (247 mm)
3 1/8 in. (79 mm)
20 5/8 in. (525 mm)
29 ¾ in. (756 mm)