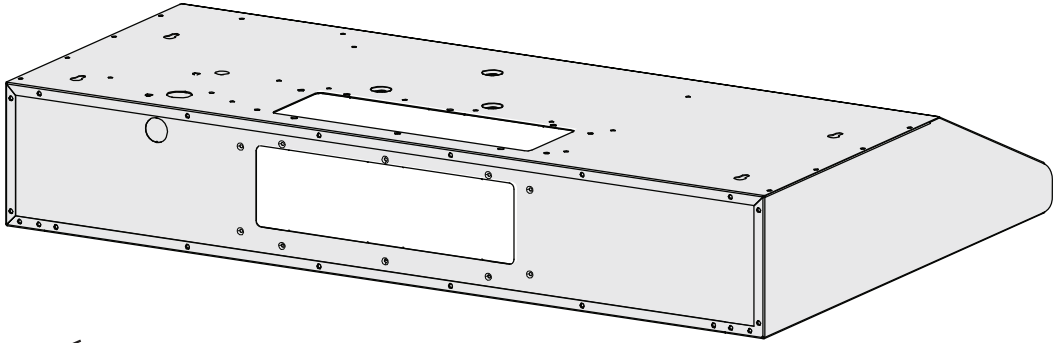

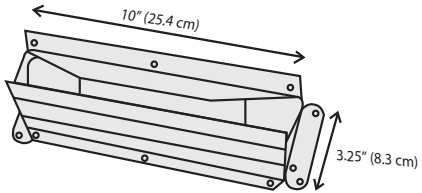
10" (25.4 cm)
3.25" (8.3 cm)

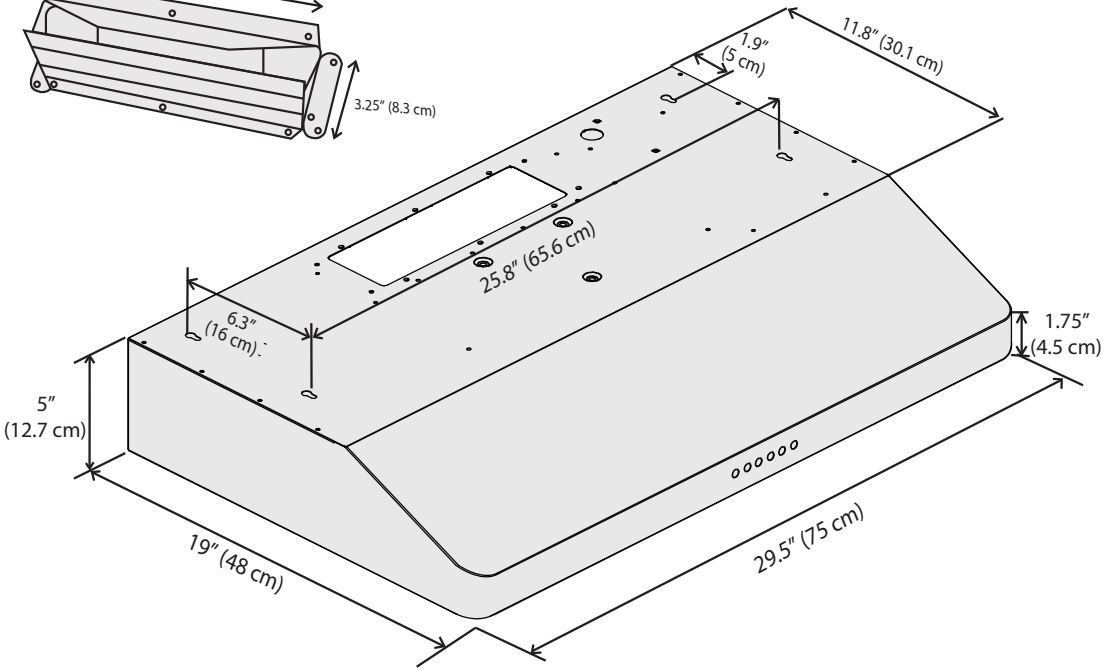
11.8" (30.1 cm)
1.9"
(5 cm)
25.8" (65.6 cm)
6.3"
(16 cm)
1.75"
(4.5 cm)
5"
(12.7 cm)
19" (48 cm)
29.5" (75 cm)