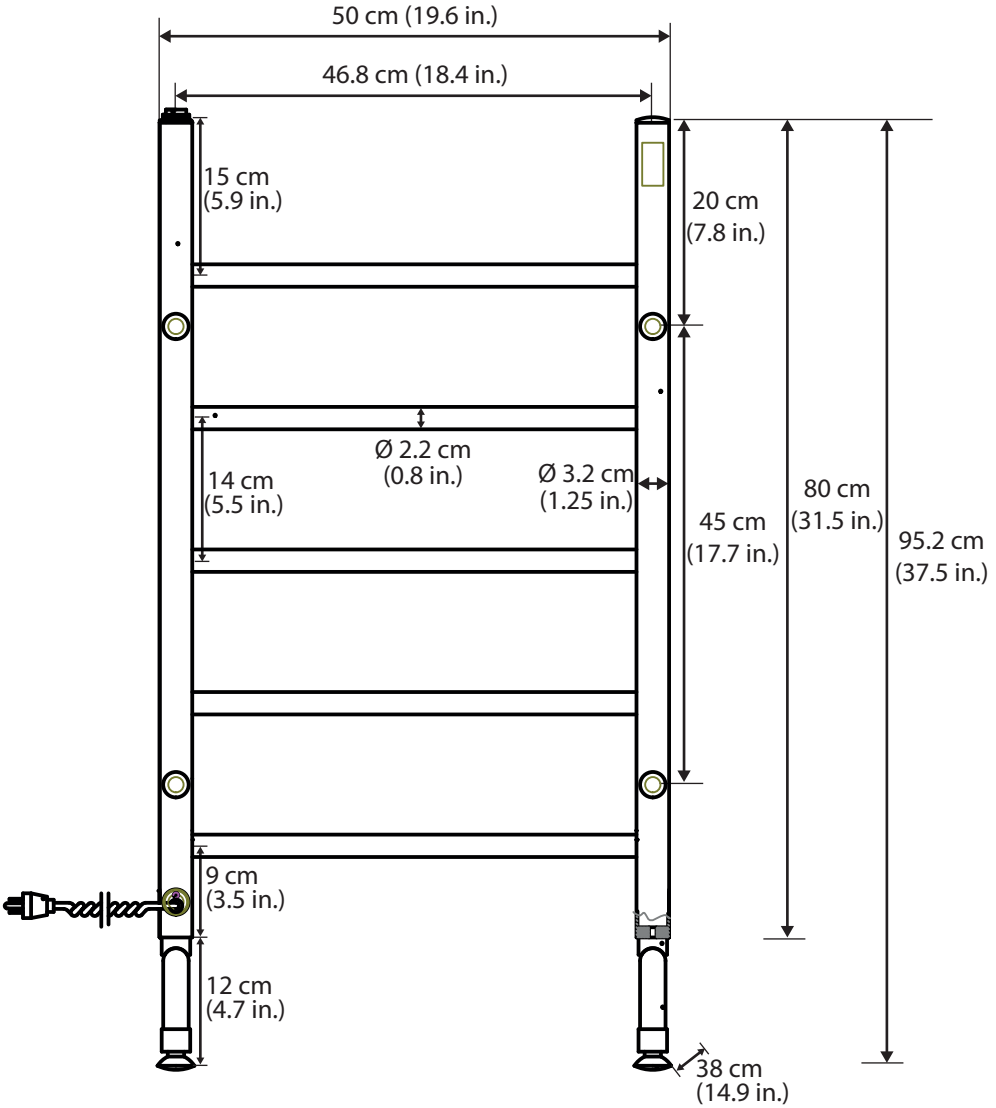
50 cm (19.6 in.)
46.8 cm (18.4 in.)
15 cm
(5.9 in.)
20 cm
(7.8 in.)
Ø 2.2 cm
(0.8 in.)
14 cm
(5.5 in.)
Ø 3.2 cm
(1.25 in.)
45 cm
(17.7 in.)
80 cm
(31.5 in.)
95.2 cm
(37.5 in.)
9 cm
(3.5 in.)
12 cm
(4.7 in.)
38 cm
(14.9 in.)

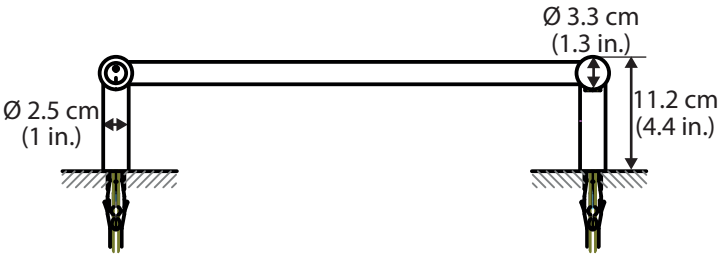
Ø 3.3 cm
(1.3 in.)
Ø 2.5 cm
(1 in.)
11.2 cm
(4.4 in.)